WHIPPLE SUPERCHARGER STAGE 1/STAGE 2 INSTALLATION MANUAL

2015-2017 FORD MUSTANG S550 5.0L COYOTE

WHIPPLE SUPERCHARGERS
3292 NORTH WEBER AVE
FRESNO, CA 93722
TEL 559.442.1261
FAX 559.442.4153
WWW.WHIPPLESUPERCHARGERS.COM

PREMIUM FUEL ONLY (91 OCTANE OR BETTER ALWAYS) RON+MON/2

CALIFORNIA AIR RESCOURCE BOARD EXECUTIVE ORDER# D-231-55

INTRODUCTION

Before beginning installation, please read this manual and important notes:

- Please read the installation manual and verify that all items are present. If you are missing hardware or have any questions, please contact your dealer or Whipple Superchargers before you start the installation.
- Modifications to your Fascia and Grill can greatly affect performance. Other aftermarket parts may also create issues. The SC system is designed for stock vehicles.
- Premium fuel (US 91 octane) is required to prevent spark-knock/detonation under certain operating conditions. Other countries must meet US 91 octane standards, RON+MON/2. **If fuel of less than 91-octane is present in the vehicle fuel tank, the tank must be completely drained and refilled with 91 or higher octane to 1/8th of a tank. The fuel system is returnless, therefore, initial fuel in the system will be low octane. Drain all fuel!**
- Operating your engine without the Whipple Calibration can result in engine damage or failure and will void your warranty.
- Request calibration via Whipple website ahead of time so your unique PCM calibration can be built prior to the SC installation to minimize any down time. **NOTE:** Whipple does not support long tube headers or cat removal. While the vehicle may run correctly, it will no longer be emissions legal and therefore not supported.
- Instructions reference **LH** (Left Hand) and **RH** (Right Hand) side of vehicle. This is if you're sitting in driver's seat facing forward.
- ***NEVER MANUALLY MOVE THE BYPASS ACTUATOR, YOU CAN RUPTURE THE INTERNAL DIAGHRAM.***

COMPETITION BASED PRODUCT MAY BE USED SOLELY ON VEHICLES USED IN SANCTIONED COMPETITION WHICH MAY NEVER BE USED UPON A PUBLIC ROAD OR HIGHWAY, UNLESS PERMITTED BY SPECIFIC REGULATORY EXEMPTION (VISIT THE "EMISSIONS" PAGE AT HTTP://WWW.SEMASAN.COM/EMISSIONS FOR STATE BY STATE DETAILS.

COMPETITION BASED PRODUCT IS LEGAL IN CALIFORNIA ONLY FOR RACING VEHICLES WHICH MAY NEVER BE USED, OR REGISTERED OR LICENSED FOR USE, UPON A HIGHWAY.

IT IS THE RESPONSIBILITY OF THE INSTALLER AND/OR USER OF THIS PRODUCT TO ENSURE THAT IT IS USED IN COMPLIANCE WITH ALL APPLICABLE LAWS AND REGULATIONS.

RECOMMENDED TOOLS AND SUPPLIES

The following items are not included in this supercharger kit and it is strongly recommended that they're used for ease of installation or maximum performance:

Engine Oil

Whipple highly recommends running Ford Motorcraft 5W-50 full synthetic motor oil (**PN #XL-5W50-QGT**) vs the stock 5W-20. You will need up to 8 quarts for an oil change along with a Motorcraft oil filter #FL-500.

Tools

¼" and 3/8" torque wrenches. Safety glasses, metric wrench set, electric or air drill, 1 ½" hole-saw, hack saw, ¼", 3/8", ½" assorted metric socket set, 5mm ball head allen, 3/8" assorted metric allen socket set, 3/8" assorted torx socket set, 8mm hex allen wrench, ½" breaker bar, flat head and Philips screw drivers and drain pan (for coolant). Heat gun or small torch for heat shrinking. Electric tape. Trim pad tool (for pushpin removal). Clean shop towels. You will need an assortment of 4", 8" and 12" tie straps/zip-ties.

Sealants, Chemicals and Lubricants

Anti-seize for bolt and spark plug threads (use only when stated, otherwise the torque value must be reduced). Assembly lubricant (white lithium grease or petroleum jelly). Cleaner/degreaser such as carb cleaner. Blue Loctite #243 or equivalent.

You'll be required to fill your intercooler system with approx. 2 gallons of distilled water and Ford Factory specification engine coolant. This is not supplied in the system, you can find the coolant at any local auto parts store. NEVER USE TAP WATER, as it can corrode and create poor performance.

STOP AND READ BEFORE PROCEEDING

The Whipple Supercharger system is designed to run on premium fuel **ONLY**. Failure to run anything other than 91 or higher (RON+MON)/2 will result in **ENGINE FAILURE** and will **VOID YOUR POWERTRAIN WARRANTY!**

Drain the fuel if any of these five situations are possible. **WARNING!** Draining your fuel means you physically remove the fuel from the vehicle, from the gas tank or fuel rail until empty, not by running vehicle down to low range. Today's vehicles are RETURNLESS, the fuel in the filter, pump and lines will not be returned to tank, thus, your initial fuel delivery will be the fuel that was left in the system from improper draining.

1. **New vehicles with less than 100 miles. New vehicles are shipped with lower than 87 octane fuel from manufacturer.**
2. **Any of the last 2 tanks fills had less than 91 or higher octane (RON+MON)/2.**
3. **Fuel is older than 3 months.**
4. **Fuel has been mixed between low and high octane.**
5. **You're not 100% sure of the fuel type and octane.**

PRE-INSTALLATION CHECKLIST

Before installing your Whipple Supercharger Kit, complete the following checklist.

1. Verify Condition of Vehicle: Before the supercharger kit is installed, ensure the engine runs smoothly and that the factory malfunction indicator light (MIL) is off. Only install the supercharger kit if the engine runs smoothly *and* the MIL is off.

2. **!! CAUTION !! This product is intended for use only on STOCK, UNMODIFIED, WELL-MAINTAINED engines. Installation on a worn-out or modified engine is not recommended without factory computer and fuel system modifications. Custom engine configurations could require custom tuning and other supporting modifications.**

3. Verify Fuel System: Supercharger systems should only be installed on vehicles that have new or clean fuel filters.

4. Assess Cleanliness of Installation Area: Make sure your work area and the under-hood area are free from debris. This supercharger is a high-quality, close-tolerance compressor and must not be subjected to contamination by dirt or any type of foreign material. If necessary, vacuum around engine to remove any foreign material.

5. **!! CAUTION !! DO NOT remove the protective seal on the supercharger prior to installation. Foreign material entering the supercharger will automatically void all warranties.**

6. Identify Supercharger Kit Components: Before beginning installation, identify all the components of your Whipple Supercharger Kit and ensure all items are present and undamaged.

7. **!! CAUTION !! Do not attempt to start the engine before adding the supplied Supercharger Oil to the supercharger!**

SAFETY PRECAUTIONS

CAREFULLY READ THE IMPORTANT SAFETY PRECAUTIONS AND WARNINGS BEFORE PROCEEDING WITH THE INSTALLATION!

Appropriate disassembly, assembly methods and procedures are essential to ensure the personal safety of the individual performing the kit installation. Improper installation due to the failure to correctly follow these instructions could cause personally injury or death. Read each step of the installation manual carefully before starting the installation.

- Always wear safety glasses for eye protection.
- Place the ignition switch in the off position.
- Always apply the parking brake when working on vehicle.
- Block the front and rear tire surfaces to prevent unexpected vehicle movement.
- Operate the engine only in well-ventilated areas to avoid exposure to carbon monoxide.
- Do not smoke or use flammable items near or around fuel system.
- Use chemicals and cleaners only in well-ventilated areas.
- Batteries can produce explosive hydrogen gas which can cause personal injury. Do not allow flames, sparks or flammable sources to come near the battery.
- Keep hands and any other objects away from the radiator fan blades.
- Keep yourself and your clothing away from moving parts when the engine is running.
- Do not wear loose clothing or jewelry that can be caught in rotating or moving parts.

GLOSSARY OF TERMS

ABBREVIATION	DESCRIPTION
ACT	Air Charger Temperature
DTC	Diagnostic Trouble Code
ECT	Engine Coolant Temperature
EGR	Exhaust Gas Recirculation
ETC	Electronic Throttle Control
EVAP	Evaporative emissions system
FHSCS	Flat Head Socket Cap Screw
IAT	Inlet Air Temperature
IC	Intercooler
ID	Internal Diameter
LB-IN	Pound-force inch
LB-FT	Pound-force foot
LTR	Low temp radiator
MAF	Mass Air Flow
MAP	Manifold Absolute Pressure
MY	Model Year
OBD	On Board Diagnostics
OD	Outside Diameter
PCV	Positive Crankcase Ventilation
PSI	Pound per Square Inch
SC	Supercharger
SHCS	Socket Head Cap Screw
TPS	Throttle Pressure Sensor
TRQ	Torque

WARNING

*****NOTICE**: Installation of Whipple Supercharger products signifies that you have read this document and have agreed to the terms stated within.*

It's the purchaser's responsibility to follow all installation instruction guidelines and safety procedures supplied with the product as it's received by the purchaser to determine the compatibility of the product with the vehicle or the device the purchaser intends to install the product on.

Whipple Superchargers assumes no responsibility for damages occurring from accident, misuse, abuse, improper installation, improper operation, lack of reasonable care or all previously stated reasons resulting from incompatibility with other manufacturer's products.

There are no warranties expressed or implied for engine failure or damage to the vehicle in any way, loss of use or inconvenience or labor reimbursement. This includes merchantability and fitness.

The information contained in this publication was accurate and in effect at the time the publication was approved for printing and is subject to change without notice or liability. Whipple Superchargers reserves the right to revise the information presented herein or to discontinue the production of parts described at any time.

WARNING!

VEHICLE MODS CAN CREATE RUNNING ISSUES

The 2015+ Mustang is Mass Air Flow (MAF) based. The MAF sensor is located after the air filter. Changes to the flow of the airbox can greatly affect the airflow path, which creates potential fueling related issues, especially at low airflow areas. Changes to the front grill/fascia and the factory airflow path can create issues. Whipple does not offer custom calibrations based on aftermarket changes.

Example of a fascia mod that will greatly affect performance.

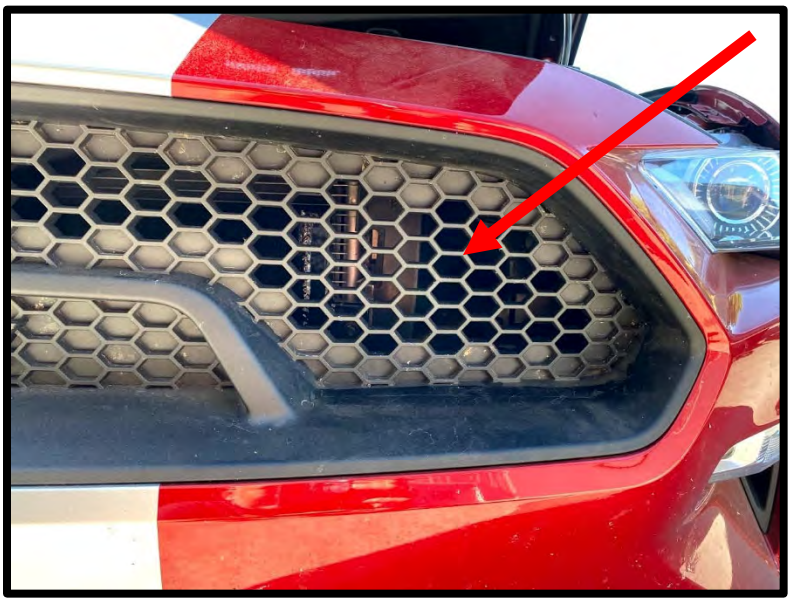

Stock fascia and grill has the main air feed through the center radiator area, the air makes a 90deg turn to factory snorkel.

SUPERCHARGER INSTALLATION INSTRUCTIONS

It is strongly recommended that you read through this guide **before** you begin installing the Whipple Supercharger.

1. Follow the flash tool instructions supplied to extract the information required, always get your calibration before you start the install to avoid any possible delays.

2. **BYPASS ACTUATOR**: This is pre-assembled and pre-installed. DO NOT MOVE the actuator, damage may occur.

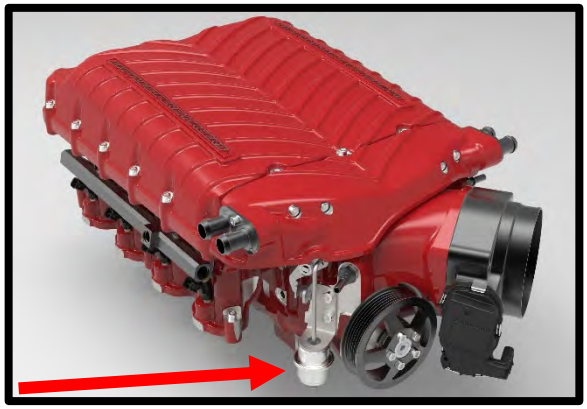

3. Using an air hose, blow off any loose dirt or debris from engine compartment. If really dirty, then steam clean the engine compartment before proceeding to the next step.

4. Release the fuel system pressure (NOTE: The following procedure is taken directly from the Ford Service Manual).

WARNING: Fuel in the system remains under high pressure even when the engine is not running. Before working on or disconnecting any of the fuel lines or fuel system components, the fuel system pressure must be relieved. Failure to do so can result in personal injury.

WARNING: Do not smoke or carry lighted tobacco or open flame of any type when working on or near any fuel-related components. Highly flammable mixtures are always present and can be ignited, resulting in personal injury.

A. Remove the rear seat cushion.
B. Disconnect the factory FPDM (Fuel Pump Driver Module).
C. Start the engine and allow it to idle until it stalls.
D. After the engine stalls, crank the engine for approximately 10 seconds to make sure the fuel injector supply pressure has been released.
E. Turn the ignition switch to the OFF position. Reconnect the FPDM electrical connector.

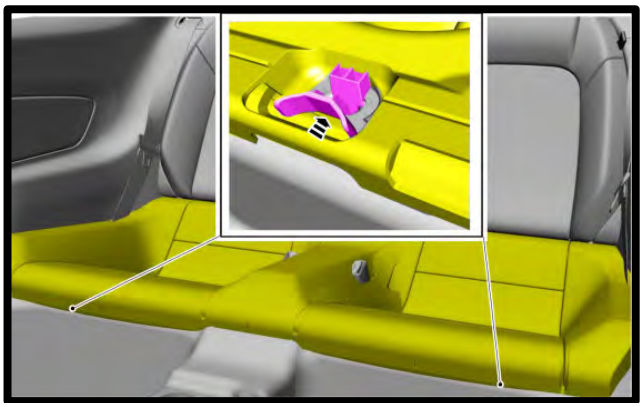

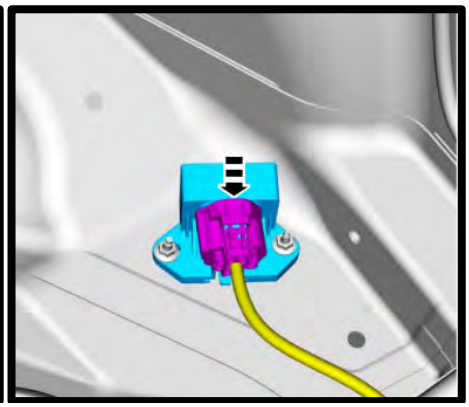

5. Locate the battery on the passenger side of vehicle. Remove the plastic cover and (3) retaining nuts for battery access. With an 8mm wrench disconnect both (-) battery cables from battery. Make sure the cables are far enough away from the battery that it does not accidentally touch the battery and make connection during installation.

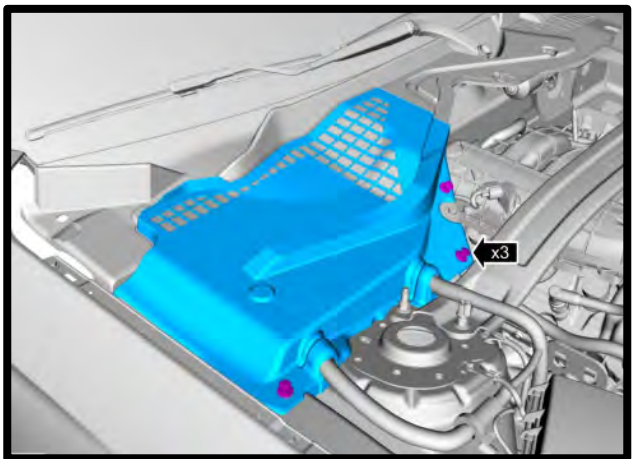

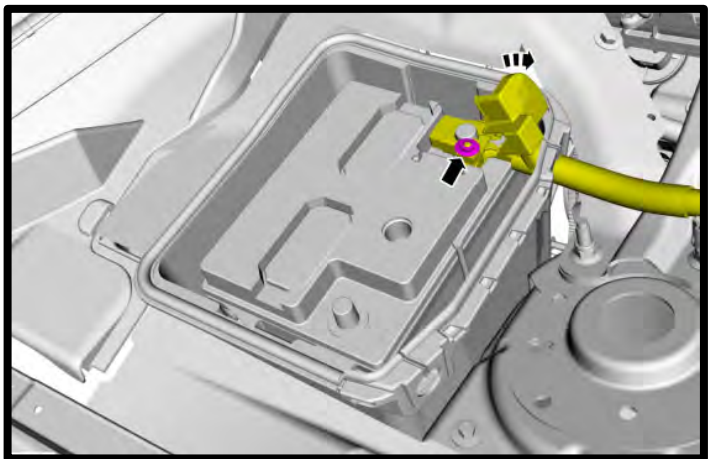

6. Lift the front of the vehicle using the Ford recommended lifting points and place on to safety stands.

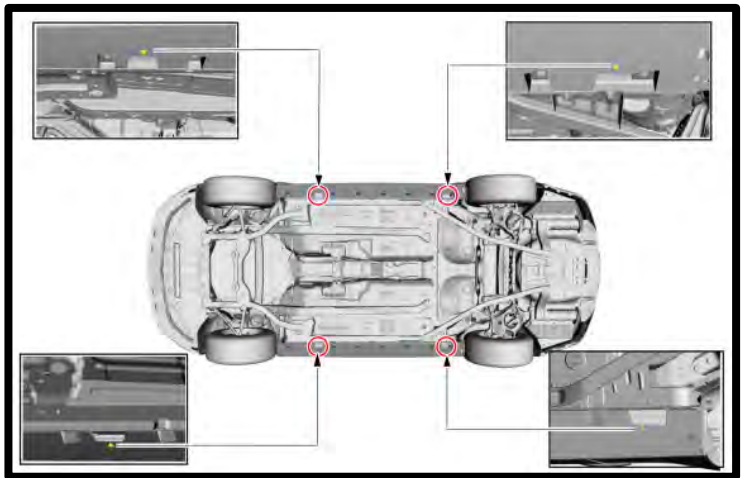

7. Remove the (16) fasteners and (6) push pins from the underbody shield. Remove shield from vehicle.

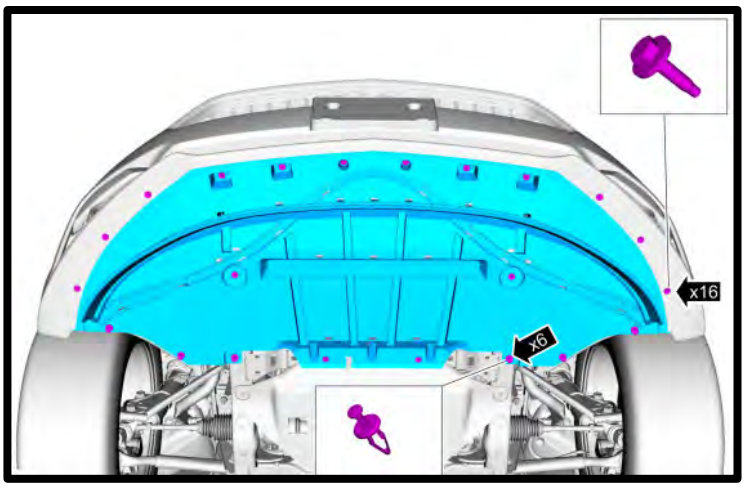

8. Remove the inner fender push pins.

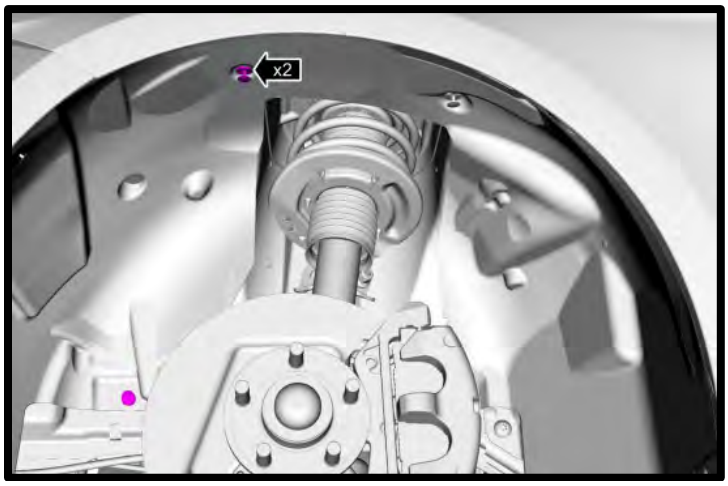

9. Remove the push pins and position the inner fender liner aside.

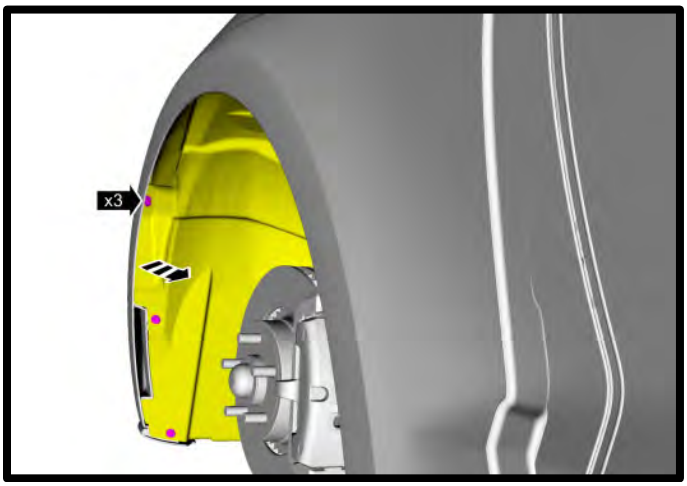

10. Disconnect the fog lamps from fascia.

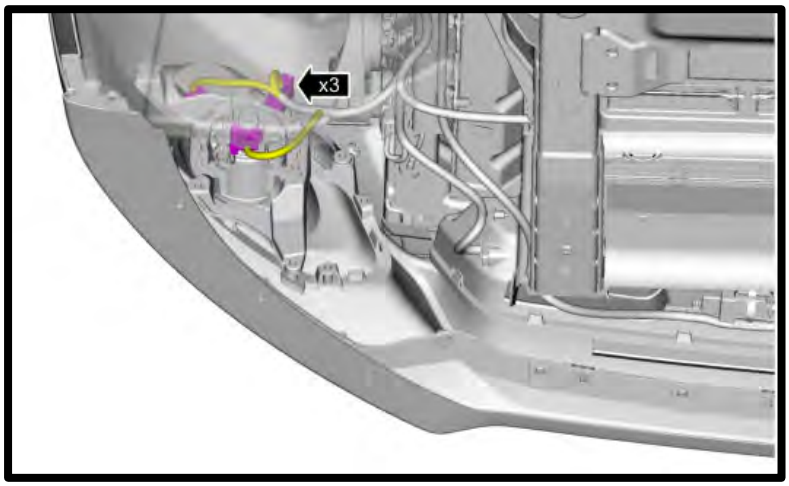

11. Remove the bolt and separate the front bumper cover from the fender bracket. For reinstallation, torque to 15 in-lb.

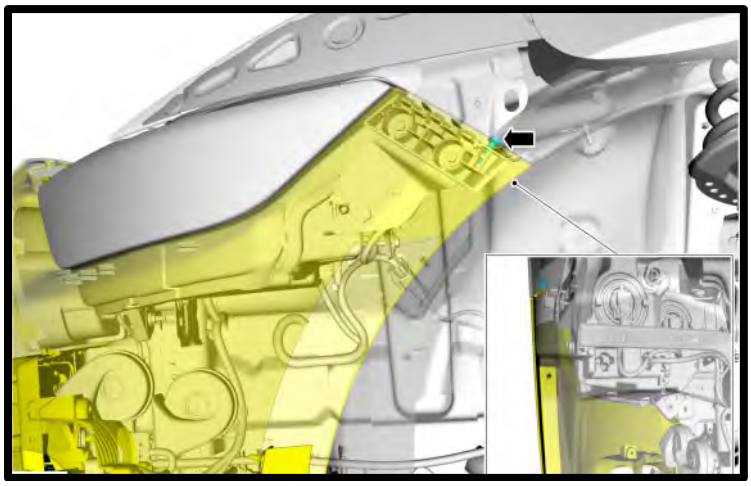

12. Using a panel puller, remove the factory inner hood insulator. This will not clear the SC system and will not be reused. Remove the factory plastic radiator shroud by pulling the center of the (8) push pins and then out. Use a flat head screw driver to pry the center head up. This will all be reused.

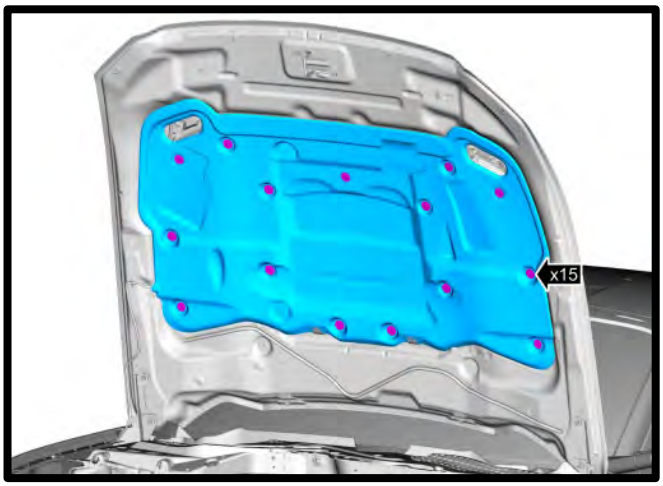

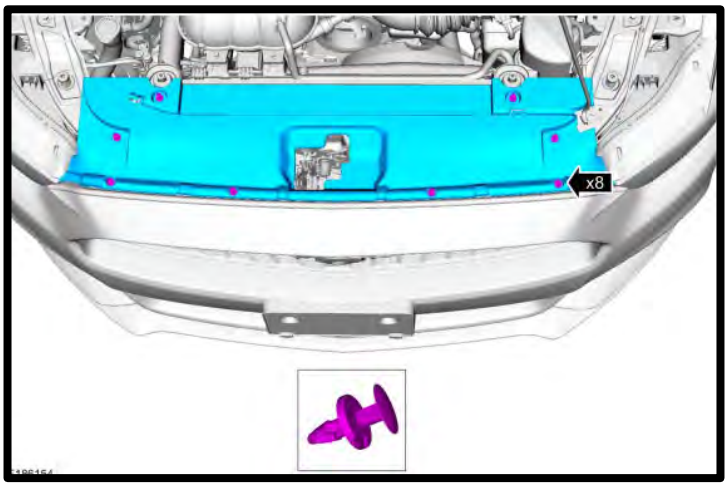

13. If equipped, remove the screws and the license plate bracket.

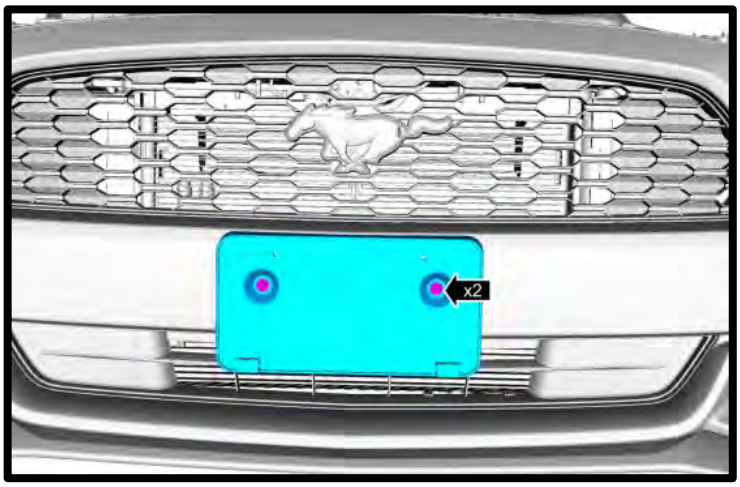

14. Position aside the outer edge of the hood seal and remove the bolt. For reinstallation, torque to 15 in-lb.

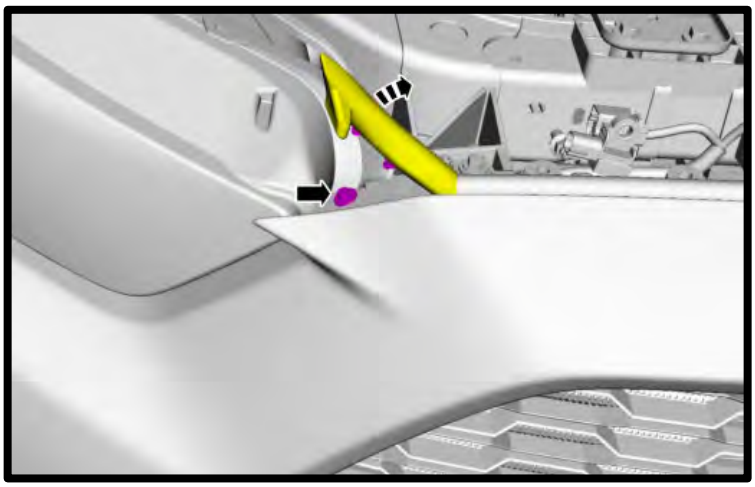

15. Remove the (6) screws from fascia. Lift the fascia up off the alignment pins, pull forward and off the vehicle. For reinstallation, torque to 48 in-lb.

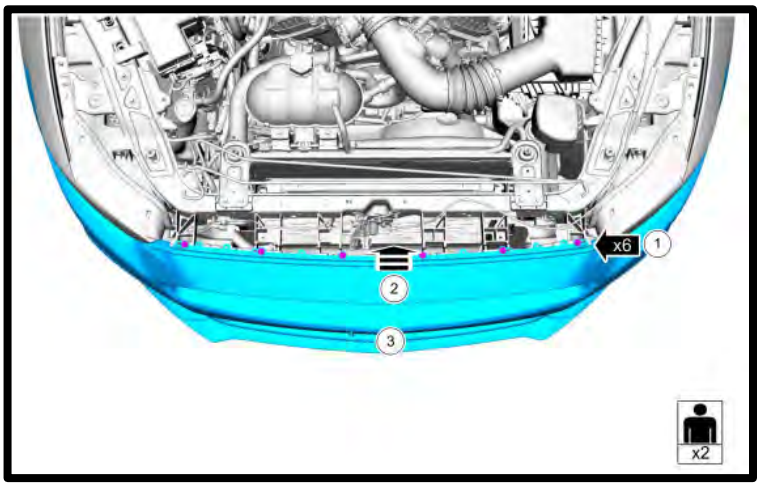

16. With a cool engine drain the coolant into a clean drain pan for reuse later. Remove the radiator cap to vent the system. (Be careful not to remove the radiator cap if the engine is still hot). The drain petcock is located on the passenger, bottom side of radiator. Loosen spigot using a ¾” wrench and drain into pan.

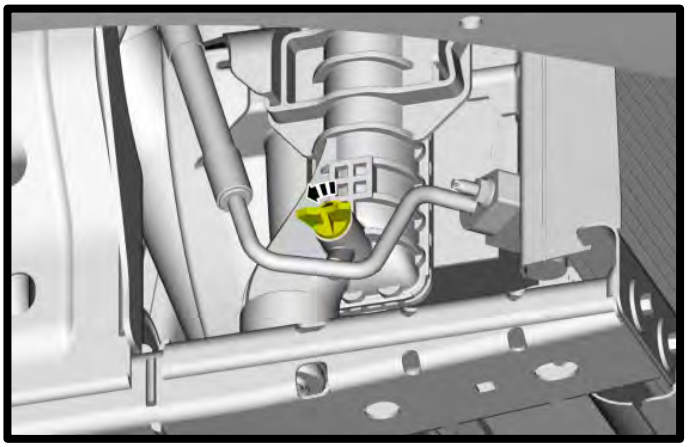

17. If equipped, remove the strut tower brace by removing the (4) factory nuts using a 15mm socket. This will not fit over the supercharger. Reinstall factory nuts (4) and torque to 25 lbs-ft.

18. Remove the factory plastic engine cover from the engine by pulling up.

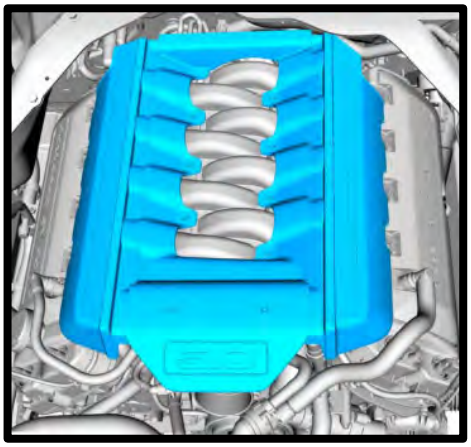

19. Remove the upper cowling for K-brace access. Remove the (7) push pin retainers and (2) tabs on the cowling. Lift up the cowl trim panel and remove the (4) nuts and (5) bolts from the K-Brace using a 13mm socket, remove from vehicle for later installation.

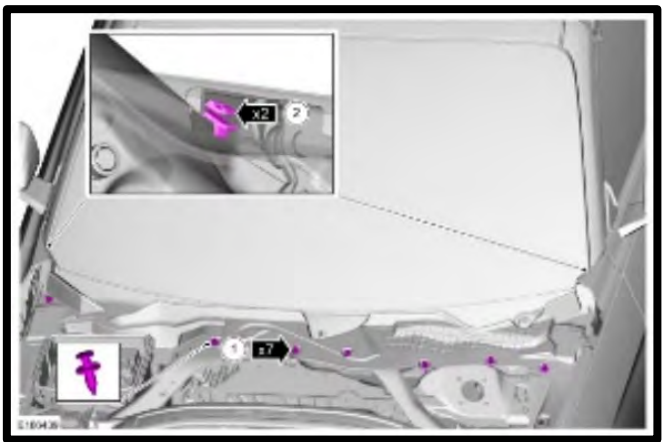

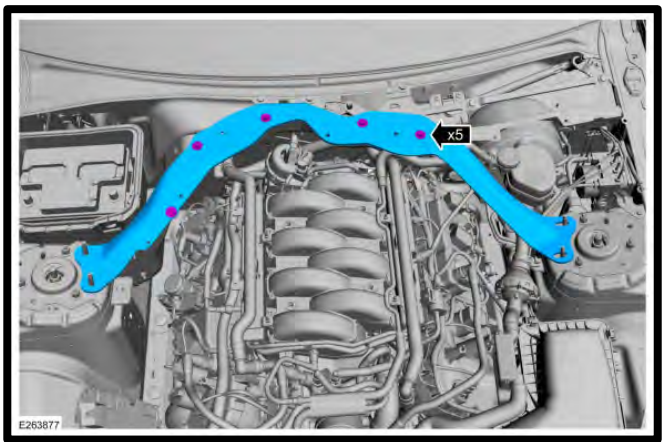

20. Disconnect and position aside the brake booster tubes, crankcase ventilation tube and resonator air inlet tube. Loosen the 2 clamps and remove the air cleaner outlet pipe.

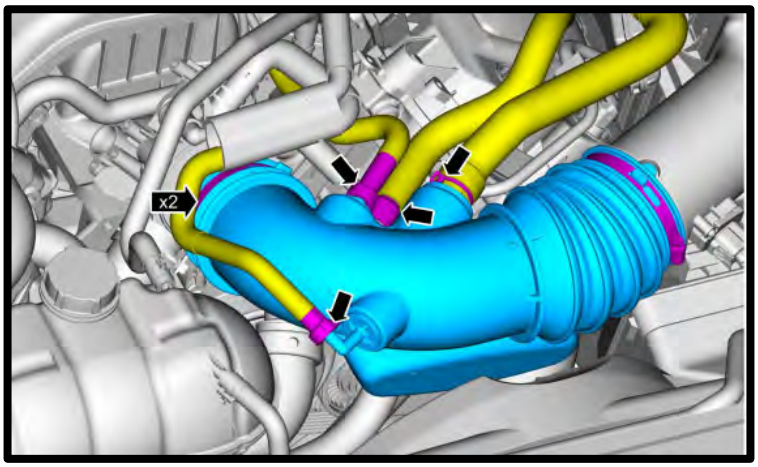

21. Disconnect the factory MAF connector by pulling back on the safety lock, then squeezing the unlocking tab and pulling back. Remove harness support from airbox lid, cut zip-tie from wire harness (not needed).

22. Detach the sound box from airbox. Remove the bolts securing airbox to vehicle, lift and remove airbox from vehicle.

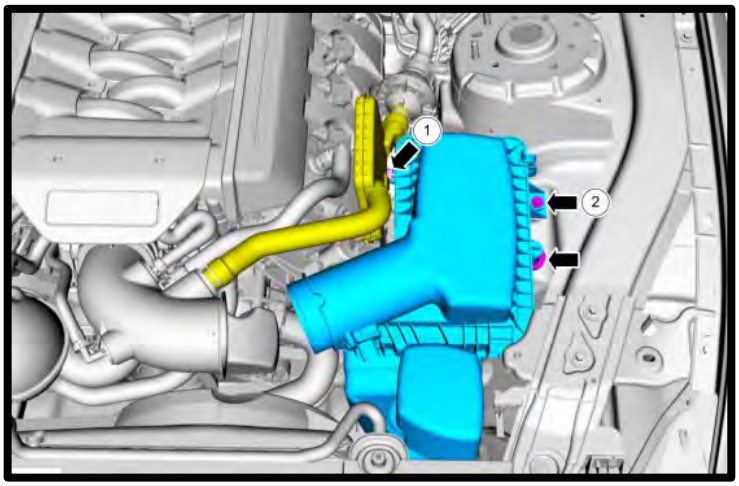

23. Remove the nuts from hose retainer bracket. Position heater hose aside and remove heater hose support.

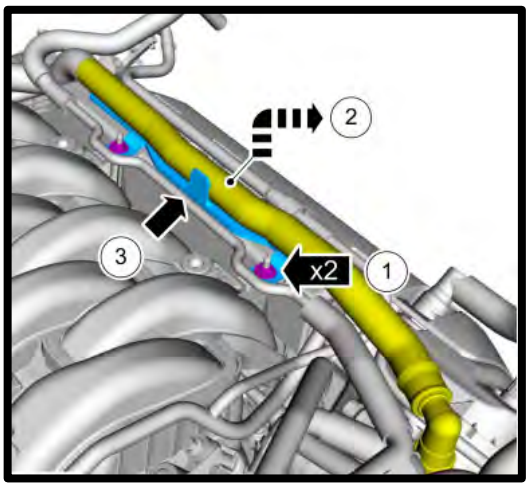

24. Disconnect the vacuum tube retainer and disconnect vacuum tube.

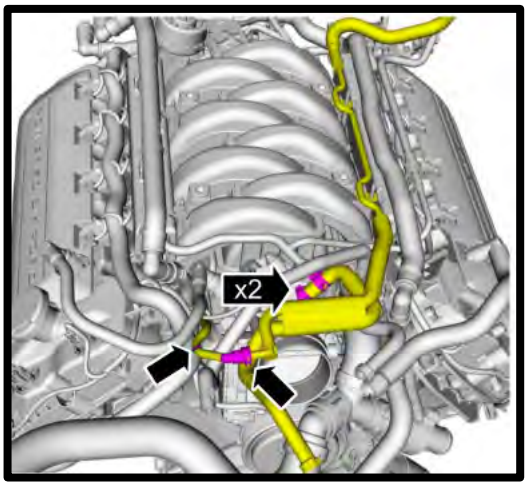

25. Carefully cut the electric tape securing the ETC wires to the throttle body. Disconnect the electronic throttle electrical connector by pushing up on the safety lock and then squeezing the connector and pulling away. Remove the harness support plastic tab from the block ground stud. Remove plastic tab from loom, this will be too close to belt later.

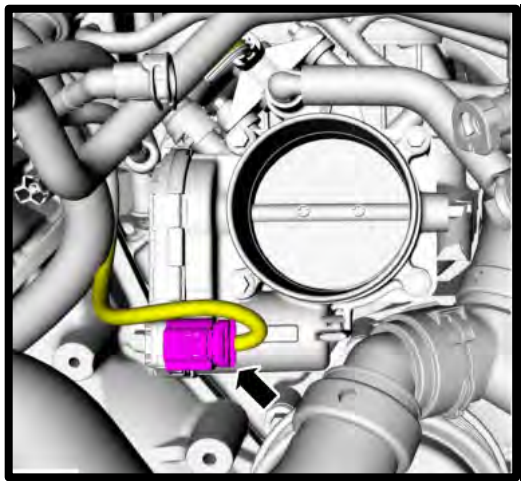

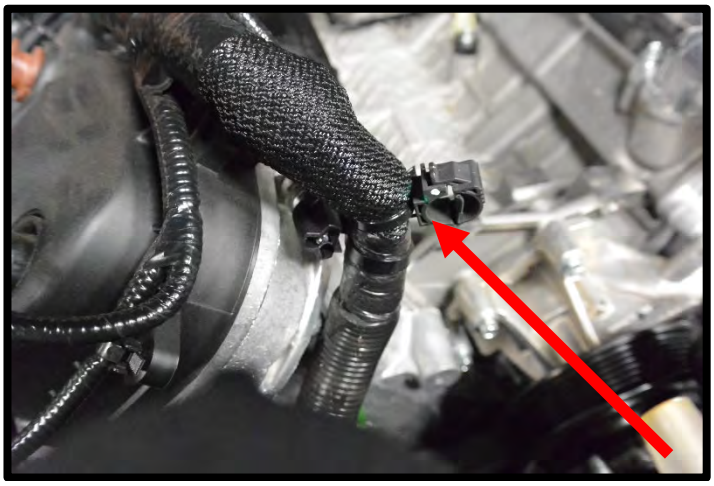

26. Disconnect the couplings and remove the crankcase vent tube. Disconnect EVAP purge valve electrical connect and disconnect EVAP tube.

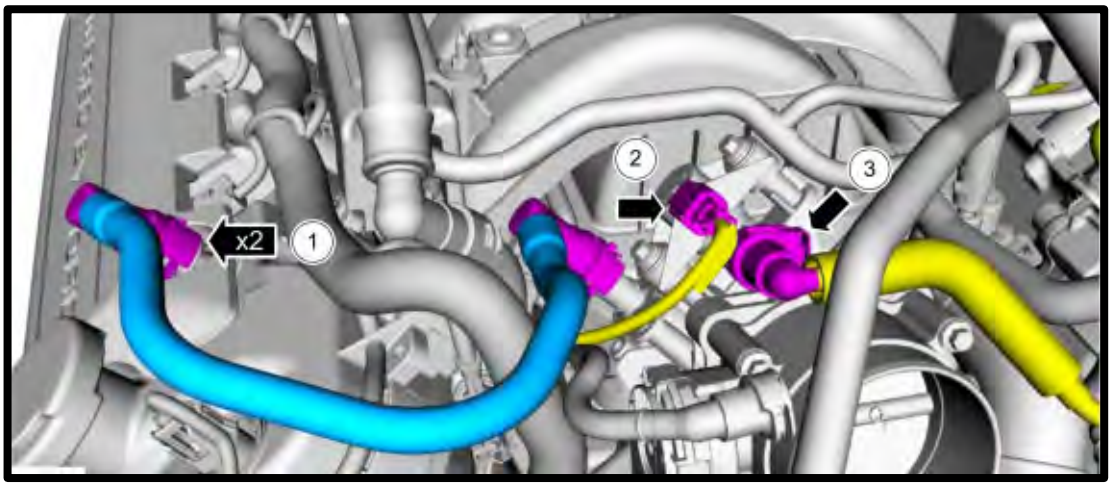

27. Gently pry up the push pin securing the induction resonance tube to the strut tower. Remove the mounting nut at the base of the tube at the firewall (10mm socket). Remove induction resonance tube from the cowl, this will not be reused. Install supplied sound tube delete block off to factory location.

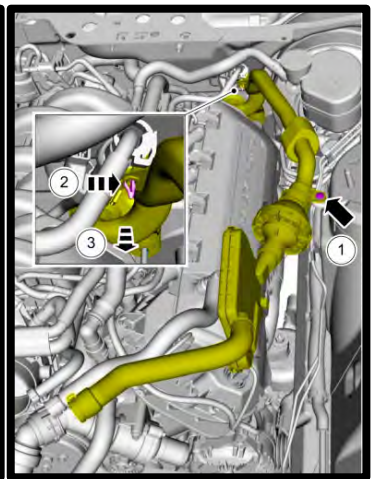

28. Remove EVAP purge valve from intake manifold for later installation.

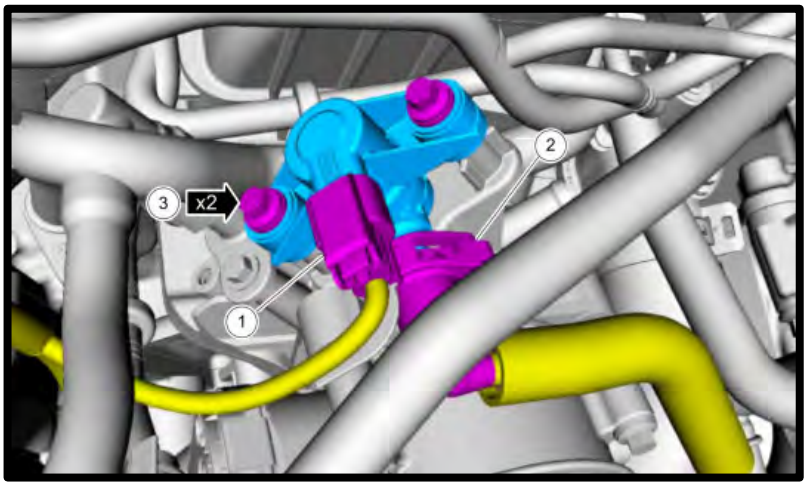

29. Remove the EVAP tubing from driver side valve cover (remove support from valve cover) and down below brake booster.

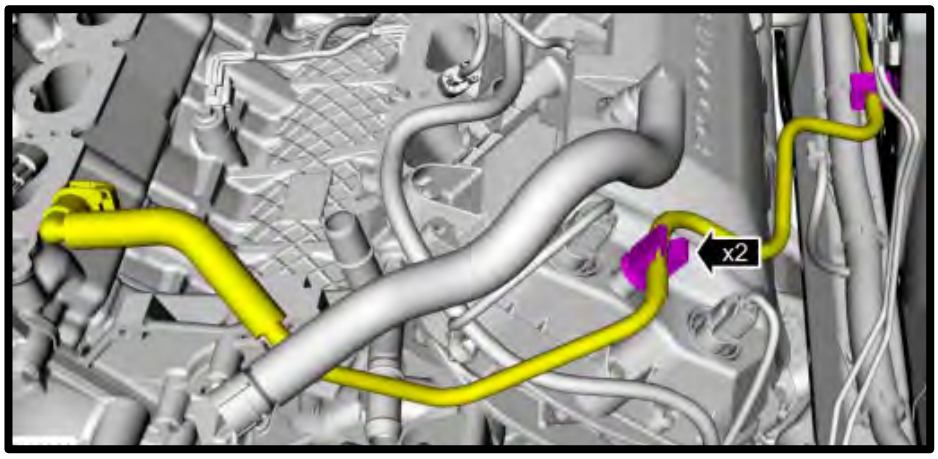

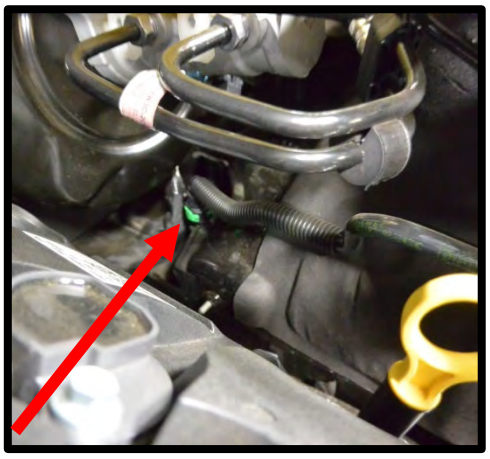

30. Using a pinch clamp tool, remove the brake booster line that connects the brake aspirator rubber line from brake booster check valve.

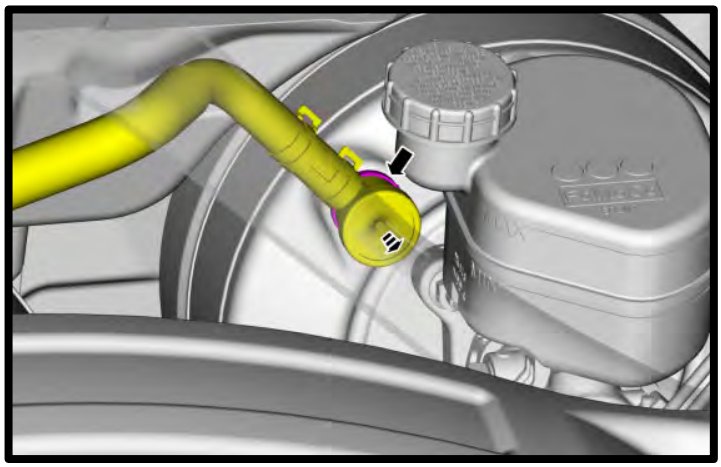

31. Remove the (4x) nuts from the heater hose support using 10mm deep well socket, set heater hose aside, remove bracket.

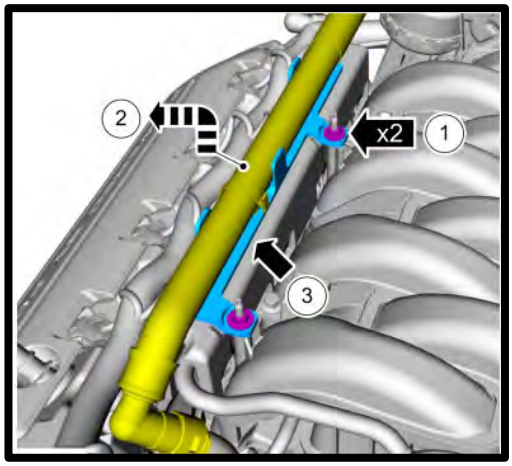

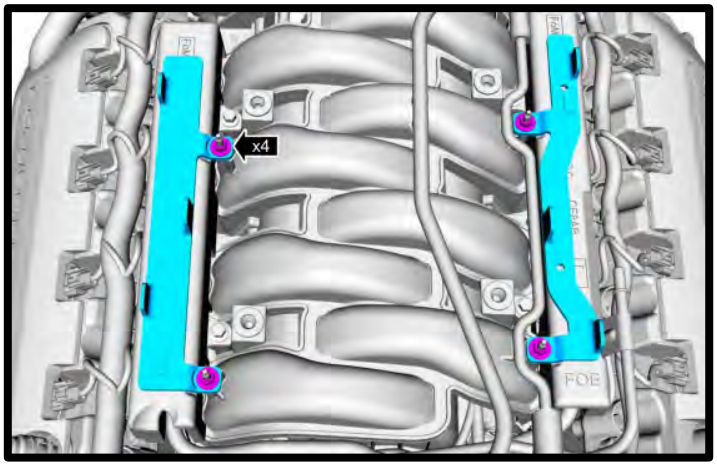

32. Remove the vent hose coming from the thermostat housing fitting by removing pinch clamp. Remove vent line from overflow tank by removing pinch clamp using a pinch clamp tool.

33. Remove the heater hoses from coolant tubes and push aside.

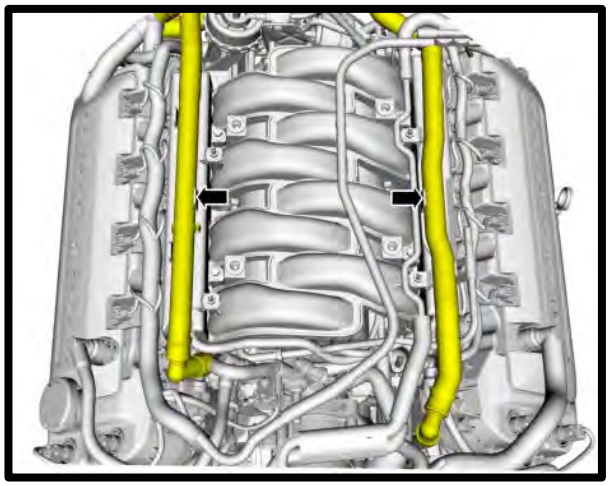

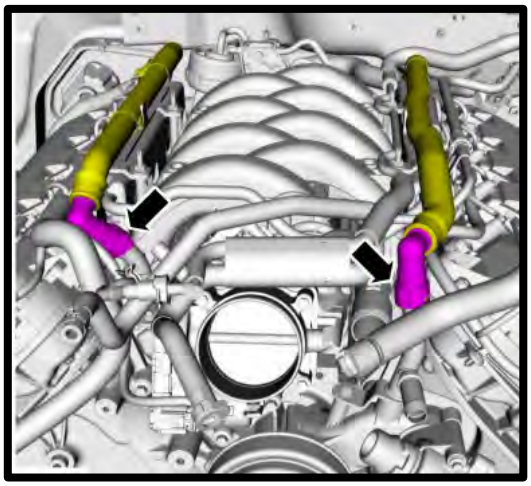

34. Remove the coolant to heater tube overflow hose using a pinch clamp tool. Pull away from heater tube.

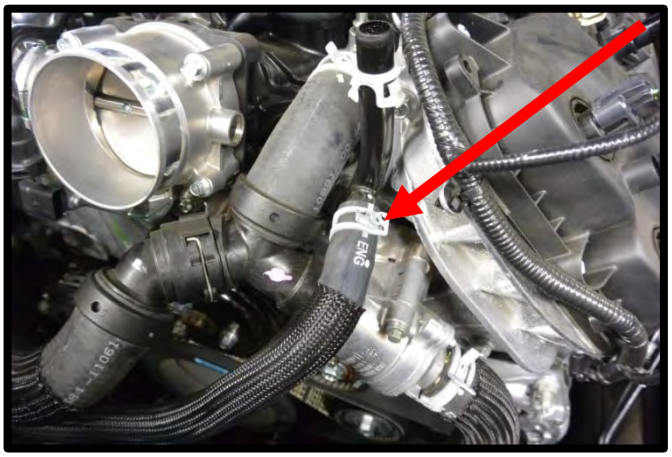

35. Remove the water neck hose using a pinch clamp tool. Pull away from water neck.

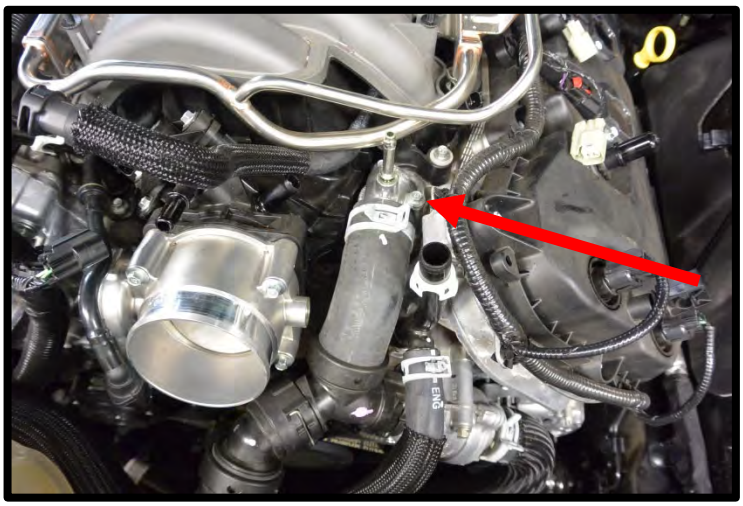

36. Remove the quick connect water fitting from the water neck to thermostat housing tee. Pull the locking metal wire, then pull connector back away from tee.

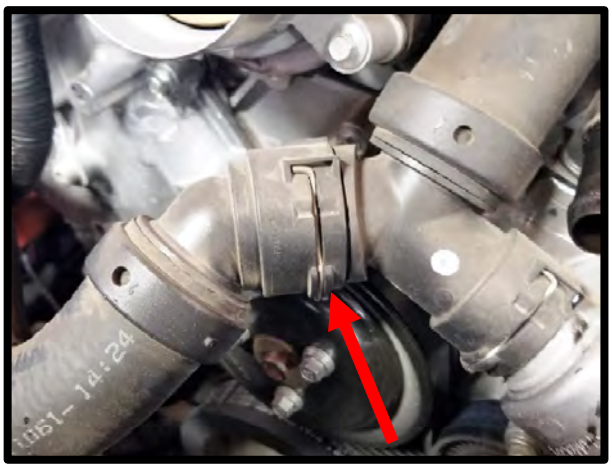

37. Carefully disconnect the factory fuel feed hose from the fuel rail. The fuel system may still have pressure, use protective eyewear and multiple rags to catch any possible fuel leak. To release, press the blue safety latch and pull the fuel fitting away from fuel rail.

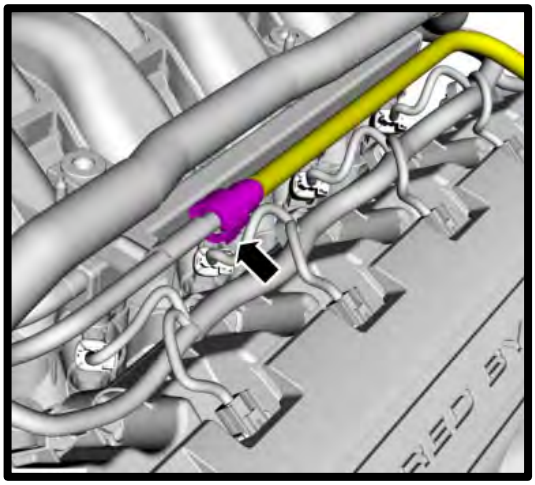

38. Remove fuel rail foam covers. Disconnect all fuel injector connectors by using a flat head screw driver on one side of the clip. Pry to one side and clip will slide off.

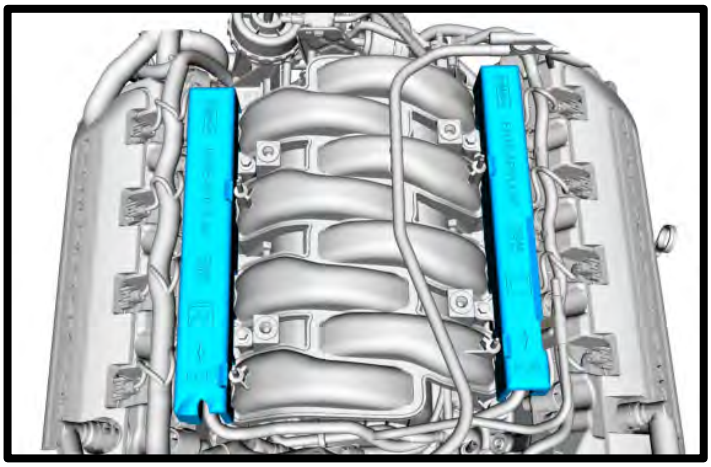

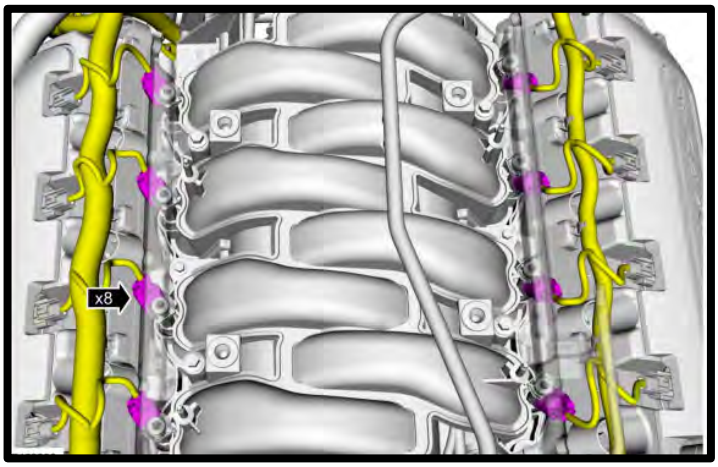

39. Loosen the (4x) bolts holding the fuel rails down, these go through to the cylinder head (10mm socket). Fuel rail does not need to be removed.

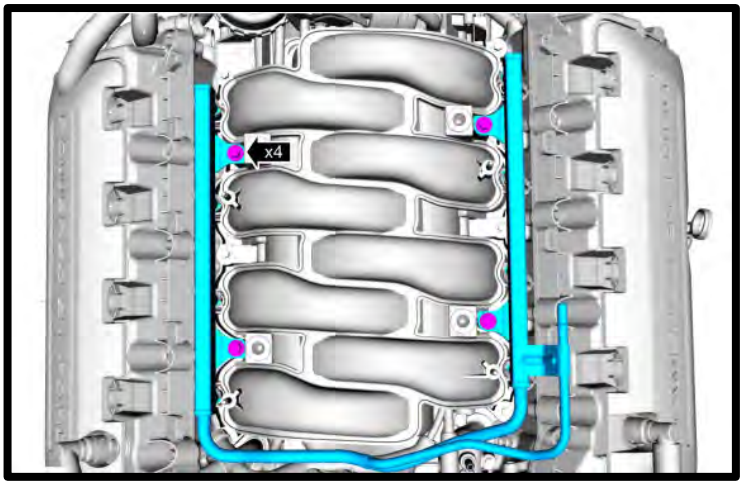

40. Loosen the (6x) manifold to cylinder head bolts using an 8mm socket.

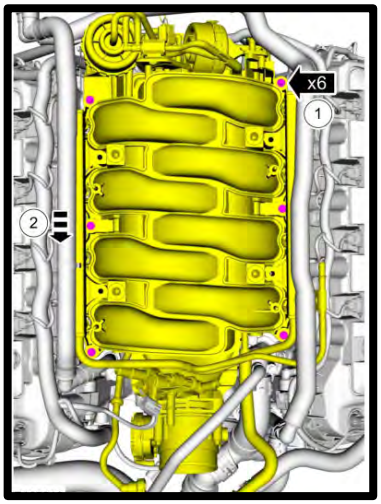

41. Remove the intake manifold from the engine. Pull up from the front then remove the (2x) wire harness push pin supports from the back of the intake manifold and disconnect the (2x) IMRC solenoid connectors and (2x) IMRC position sensor connectors by pushing on the locking tab and pulling away IMRC solenoid.

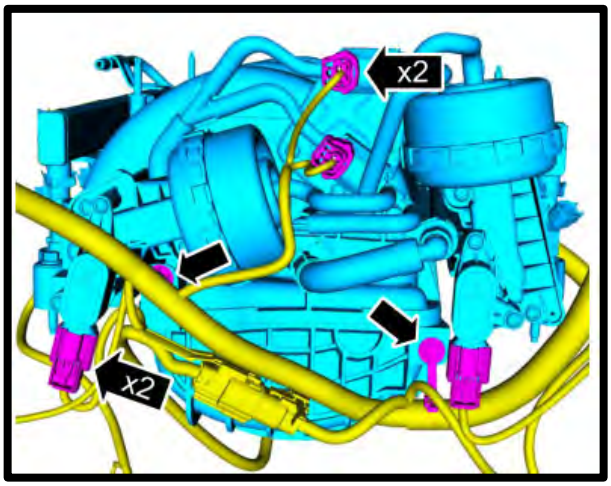

42. Clean the intake manifold to cylinder head surface using carb cleaner or acetone. Install tape over the exposed ports until manifold installation.

43. Remove the hood inner liner, this will rub the top of the supercharger. Measure the marked hood cut outs (for inner liner) using tape measure. By hand, bend the inner liner hood cut outs towards the hood. Push the cut outs back into hood and this will bend them back. These need to bend ¼" away from engine to clear supercharger lid.

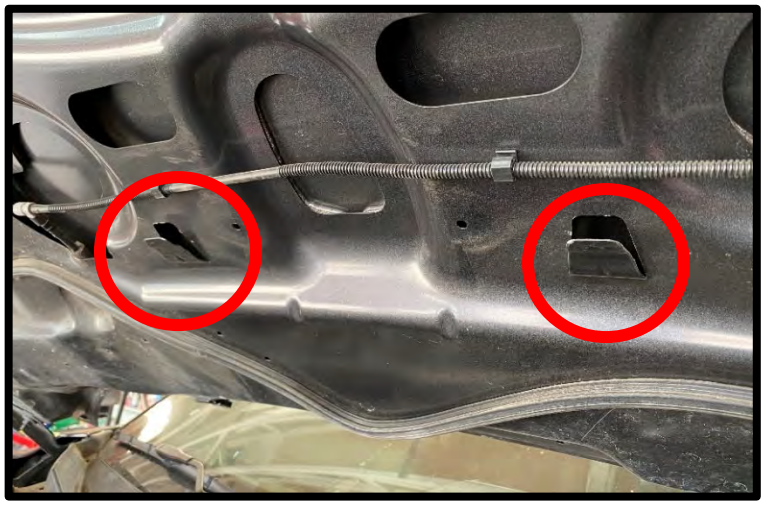

44. Using shears or saw, cut the stock stud from firewall .50” (to clear SC lid). Leave the clip as is to retain the firewall shrouding.

45. Remove both vent lines from degas bottle.

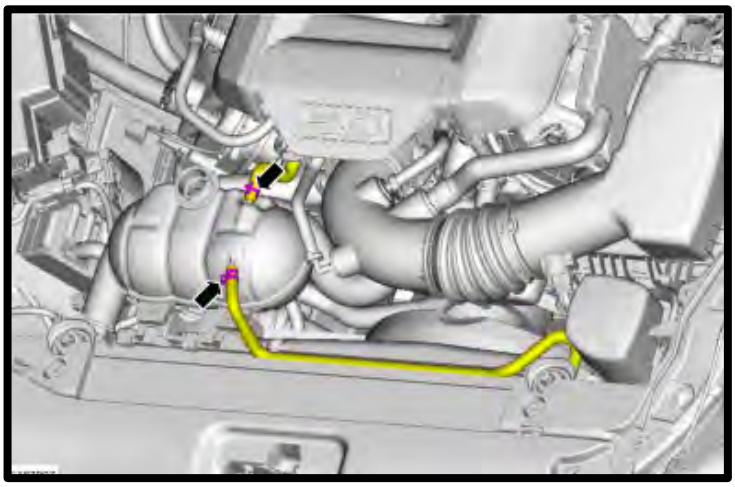

46. Remove the (2x) bolts securing degas bottle and lift up and out of the way for easier installation of SC.

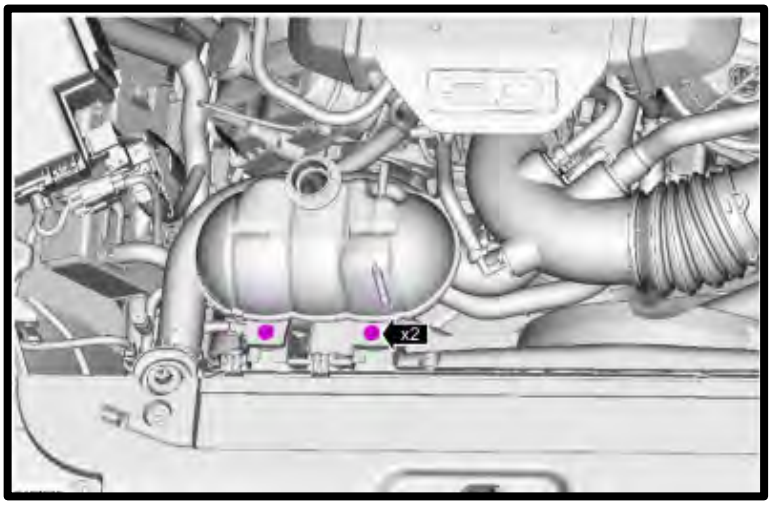

47. Loosen the (3x) bolts securing the water pump pulley (while belt is on) using a 10mm socket. Remove the belt from the engine by using a 15mm socket on a ½" breaker bar and rotating the spring-loaded tensioner in a clockwise direction. Remove the spring-loaded tensioner from the engine using a 13mm socket (bolt will be reused later). Using 10mm socket, remove water pump pulley from engine (will be reused later).

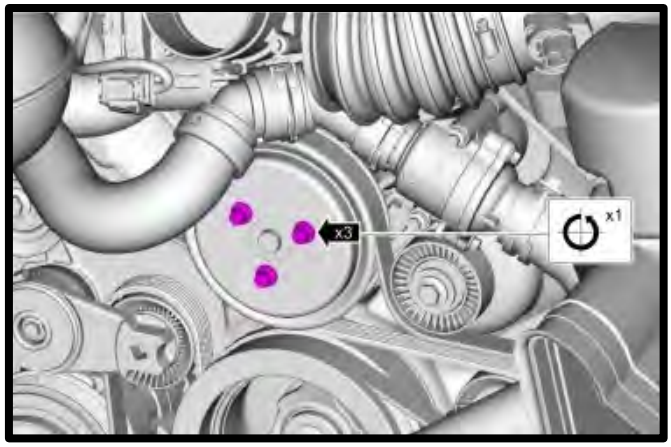

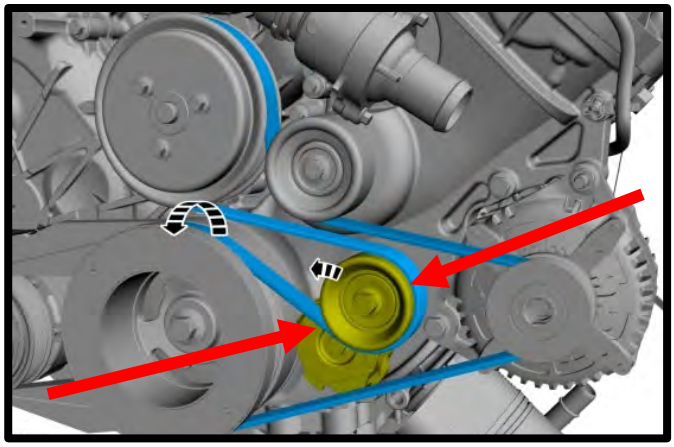

48. **Gap the supplied spark plugs to .028"**. Only use a .028" feeler gauge, any other method will lead to inconsistent results. **DO NOT CRUSH THE ELECTRODE!!** Install the supplied spark plugs. Apply light amount of anti-seize to threads. Torque spark plugs to 128 lbs-in. Reinstall the coils on plugs and torque bolts to 53 lbs-in. **NOTE:** Competition systems require you to source your own spark plugs, consult your tuner for information.

49. Install the induction resonance tube delete grommet in the hole that was exposed when the tube was removed.

50. Remove the factory sleeving off the RH side heater hose. Measure 2” after the internal water restrictor (factory clamp holds restrictor in place), cut the stock hose with 90deg connector end. Use supplied ¾” coupler to connect to new 90deg molded hose. Install the supplied straight 15.82mm quick connect fitting to end of 90deg hose. Install the shrink clamps to ends, use heat gun to shrink in place. Slide the supplied sleeving on the stock and (2x) pieces of rubber heat shrink. Install the supplied shrink clamp over factory heater hose and new hose. Use a heat gun to secure the shrink sleeving and heat shrink.

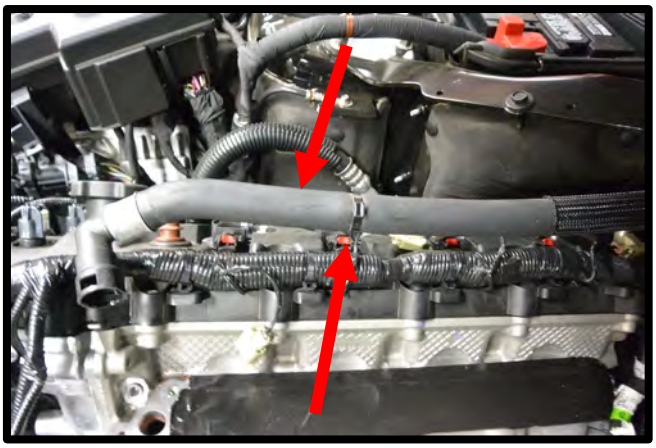

51. Remove the LH heater tube from engine by removing the (1x) bolt using an 8mm socket.

52. Install the supplied plastic heater tubes. Install the supplied oring to the tube and apply light amount of grease to oring surface. Install tube into block, then secure locking bracket with the factory bolt using an 8mm socket. **NOTE**: The bracket and heater tube has one locking tang, ensure they are lined up during installation. Torque to 89 lbs-in.

53. Install the supplied tee and 90deg hose **#200-3103400** to the driver side heater tube you just installed. Secure with the supplied #12 worm clamps (2x) on the 90deg hose to heater tube.

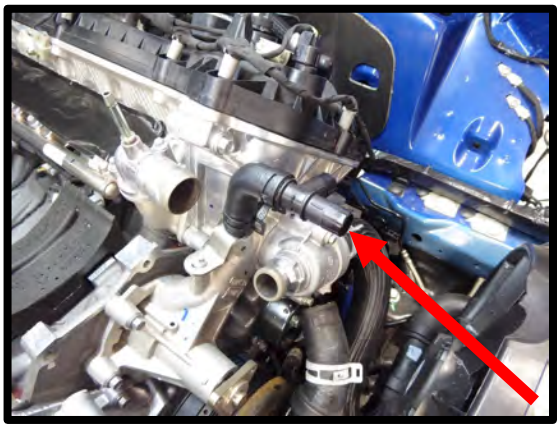

54. Using the supplied 3/4" ID x 24.5" hose, **#200-3103436,** coming from the supplied tee fitting, route between cylinder head and water neck. Cut factory hose length so the hose will go straight back towards firewall. **TIP:** Best place to cut is between cylinder 5 and 6 coils. Once cut to proper length, slide the supplied sheaving on the supplied hose and (2x) pieces of rubber heat shrink (for later install). Install the supplied shrink clamp over factory heater hose. Install the factory driver side heater hose to the coupler. Use a heat gun to secure the shrink clamp and lightly shrink sheaving to hose. **TIP:** Use zip-ties to secure hose to LH cam cover.

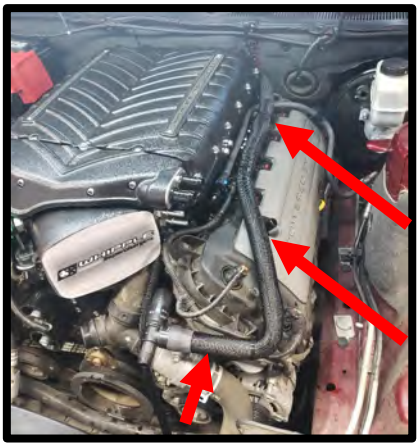

55. Transfer stock oring from stock water neck to new water neck. Apply Teflon pipe sealant to threads of 1/8” NPT to 3/8” 45 Deg fitting. Install fitting to water neck, rotate so it ends facing directly towards driver side. Install water neck to motor using stock fasteners (10mm socket), torque to 89 lbs-in.

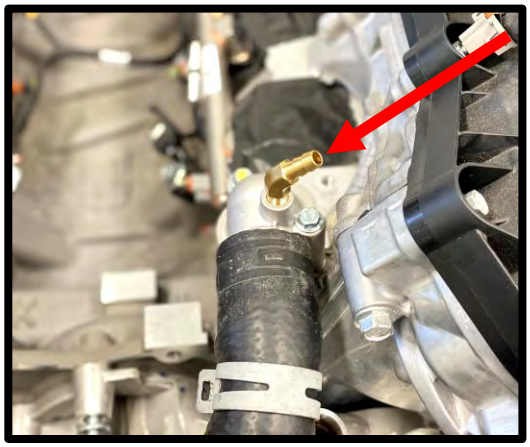

56. Using 5/16” nut driver, secure hose using supplied #24 hose clamp. Rotate the clamp at water neck towards the driver side for future clearance of the SC.

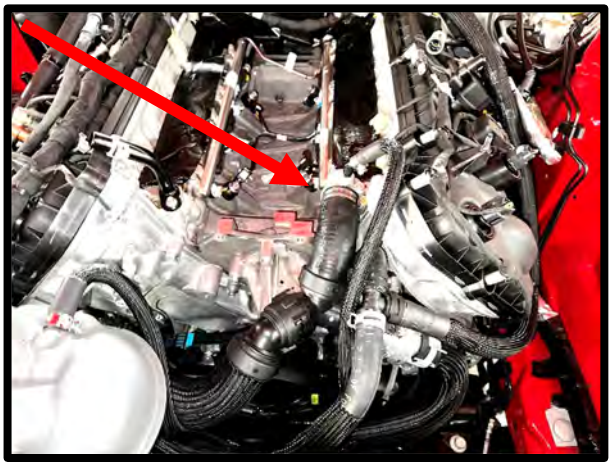

57. Install the supplied 3/8” (**#200-3103627**) formed hose from the water neck vent line, route the 3/8” towards the overflow tank for later installation. Secure with supplied #6 clamp.

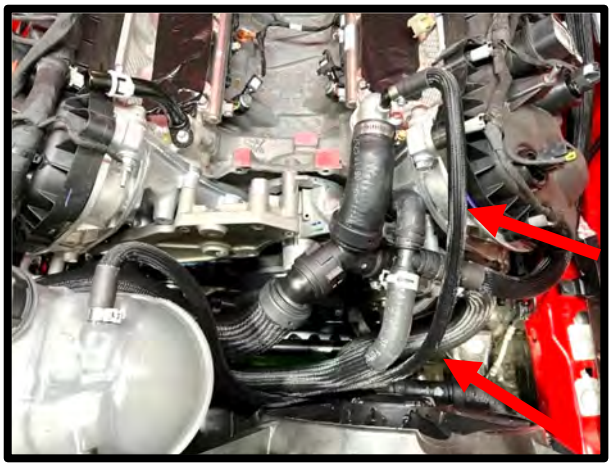

58. Reinstall the factory coolant overflow hose to the new supplied tee fitting on the driver side. Secure using factory pinch clamp.

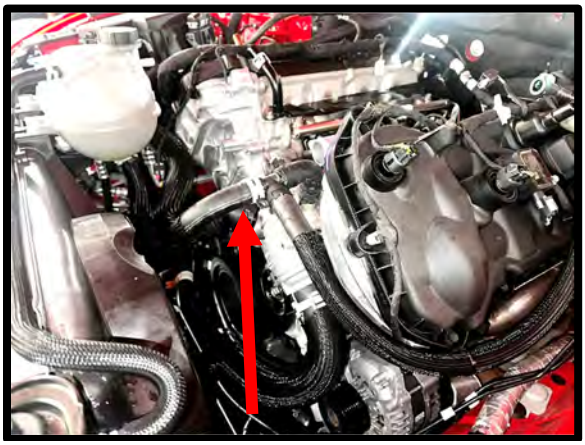

59. Remove upper radiator hose from radiator. Use a hose cutter, remove 1” from the radiator hose end. Reinstall hose once completed and secure with factory hose clamp. **TIP:** This is for added clearance for the new belt system.

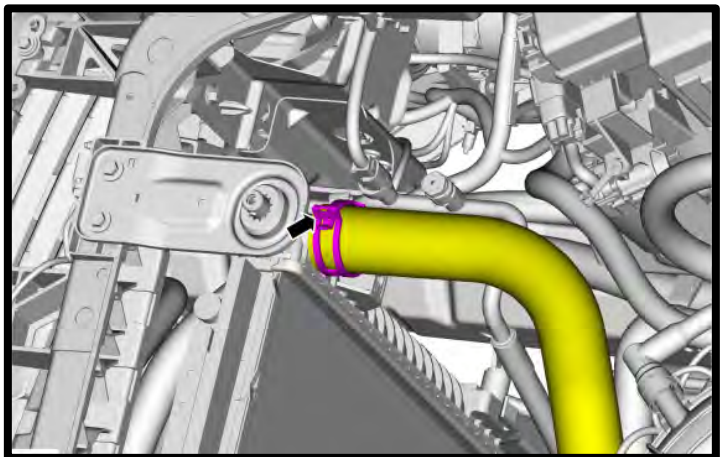

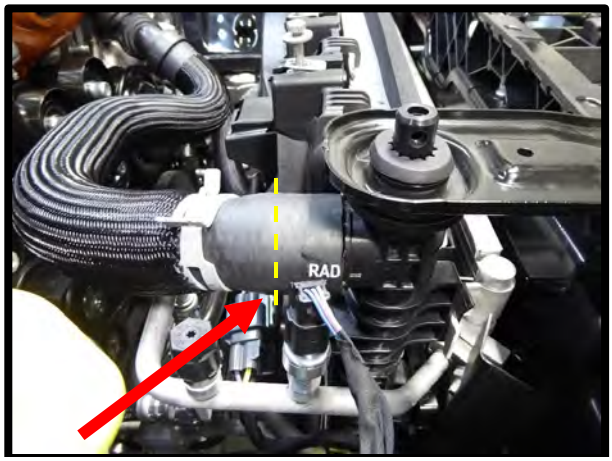

60. Remove coolant vent hose from the radiator and pull back the plastic sheaving. Shorten this hose end by 1” for additional clearance. Reinstall hose using factory clamp.

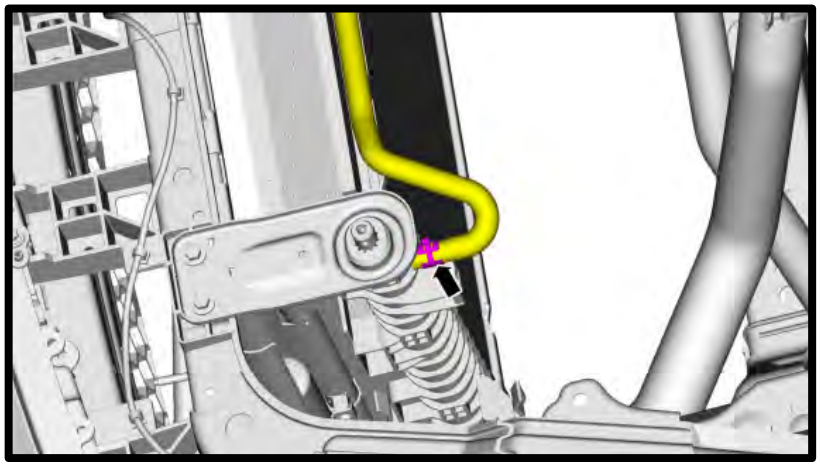

61. Locate stock ground wire bolt, located on RH side of vehicle, next to strut tower brace using an 8mm socket. Install intercooler relay harness ground eyelet (black wire) along with factory ground wire. Reinstall bolt using an 8mm socket.
    - **Dual fan installations:** Add secondary relay harness ground to same location.

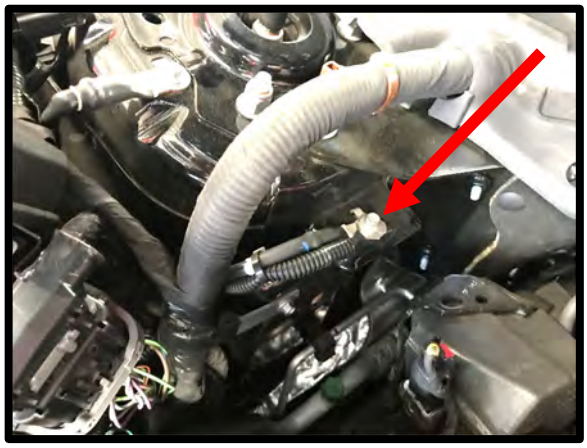

62. Open fuse box lid. Using a 10mm socket, remove the 12V (+) power stud nut from the far post. Install the IC pump relay power eyelet (red wire) to the 12V stud. Use a 10mm socket to secure stock and IC power wire.
    - **Dual fan installations:** Add secondary relay harness power eyelet to same 12v stud.

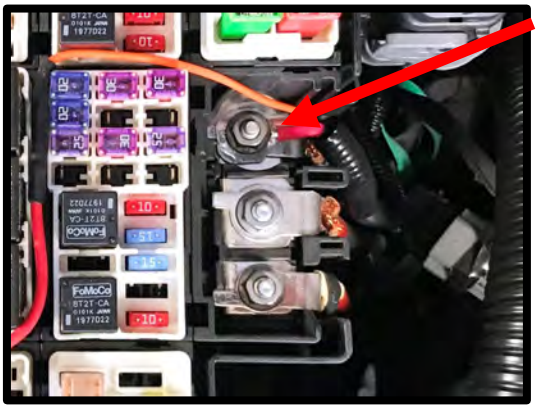

63. Pull red 10amp fuse from position **#62** (ABS). Install the 10amp red fuse in the unused fuse slot on the fuse tap. Install the supplied fuse tap into position **#62** (ABS). **Note:** 10amp red fuse should be in bottom slot, 5amp should be in top slot. Route wire over the main power stud, between the center fuse section as shown. Failure to route properly may lead to cutting 12v wire for intercooler system. **NOTE:** Factory fuse goes into empty slot, failure to do so will result in traction control/ABS error codes.

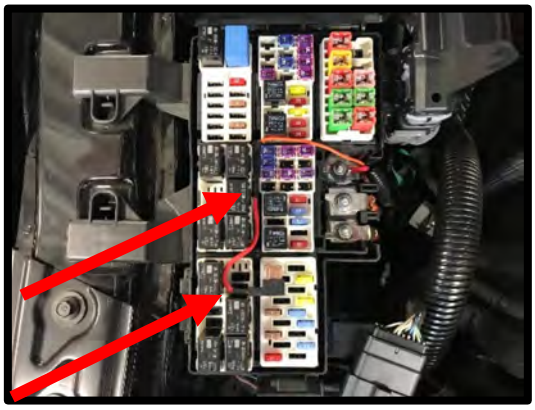

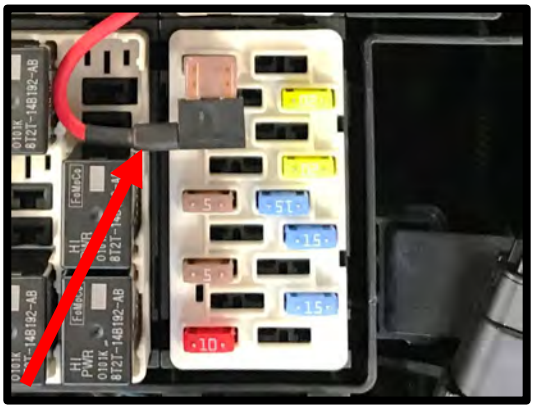

64. Mount the relay and fuse holder to the factory wire harness, secure with zip-tie. Route the 2-wire connector along the top of the condenser, to the LH side of the vehicle (near headlight) for later connection to IC pump. Secure harness using zip-ties.

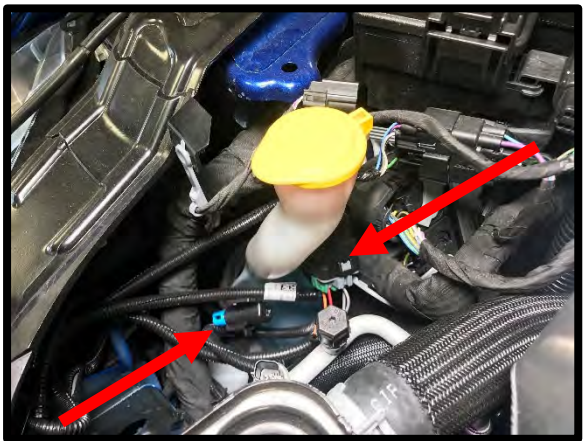

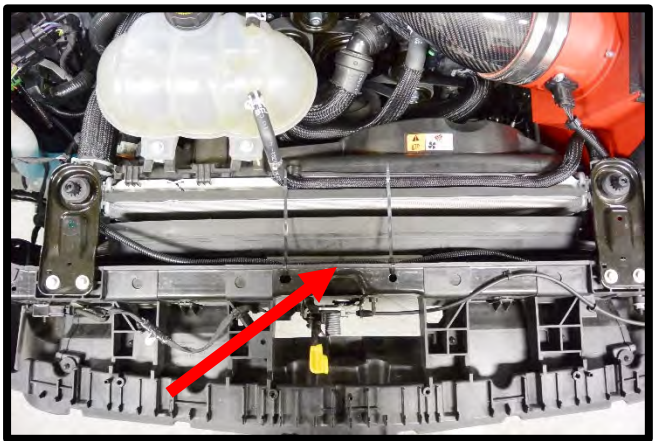

65. Follow the supplied diagram to verify the installation of the IC pump relay harness. Secure harness using zip-ties.
    - **Dual fan installation**: Connect the turn on, one-way connector from the IC pump relay to the dual fan relay harness. Mount next to IC pump relay/fuse combo. Secure harness using zip-ties.

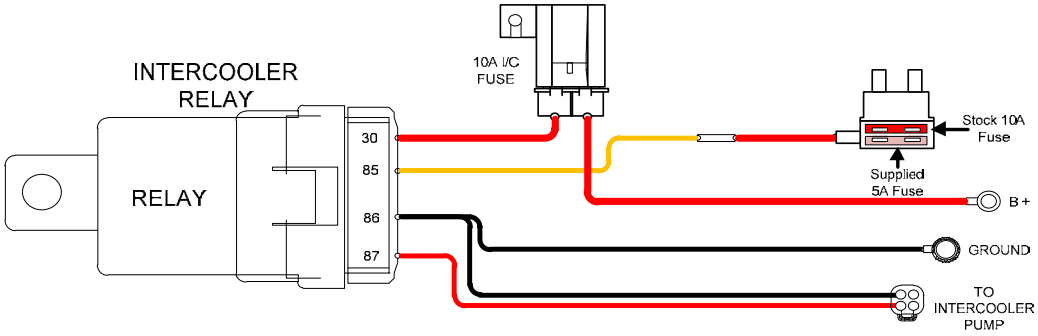

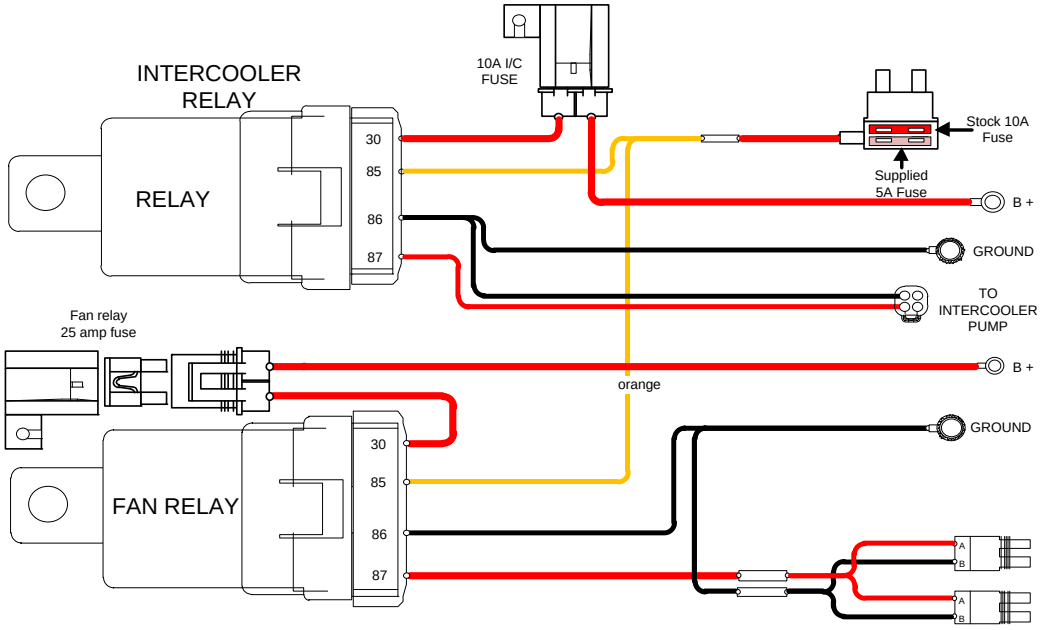

66. Install supplied electronic throttle pigtail to the factory electrical connector. Push until it locks in place, then lock the safety lock. **TIP:** When pressing together, hold the wires vs connector to ensure the wires do not come loose during connection.

67. (**Complete kits**) Connect supplied 3-way to 2-way air charge temperature pigtail at the rear of the passenger side cylinder head to the 3-way IMRC connector (**Light blue/white, violet/green, yellow/green wires**). Route to the driver side back of engine for later installation into the ACT sensor (IAT2 manifold air temperature). **NOTE:** Only works with Whipple calibration. Aftermarket calibrations require different sensor and pigtail.

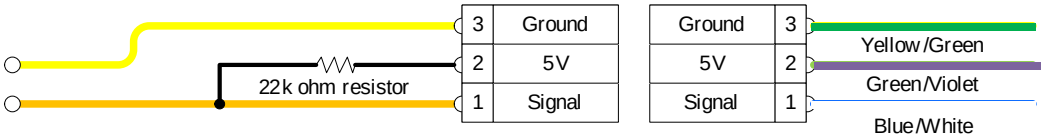

68. Using a 10mm socket, remove the (3x) factory fasteners from the timing chain to head cover and (1) from water pump (for new idler plate).

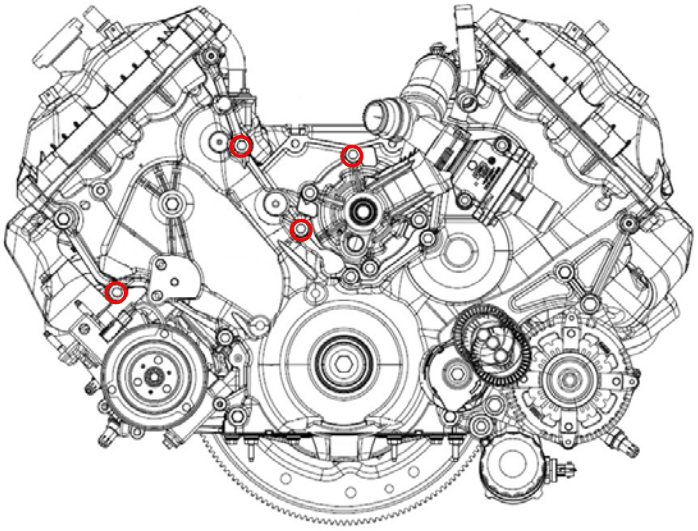

69. Use supplied (4x) 8mm x 90mm in the (3x) lower holes to secure the idler plate to the front of the passenger side of engine, install hand tight. Using a 6mm allen, torque to 22 lbs-ft.

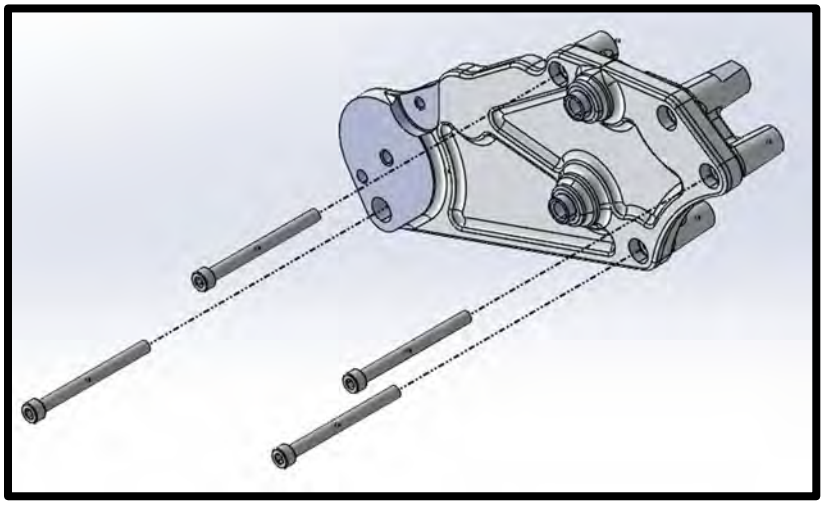

70. Install supplied adjustable idler assembly to factory spring loaded tensioner position. Locate the dowel pin to factory pin hole. Secure to engine using the stock bolt, torque the factory bolt to 30 ft-lb. Install supplied smooth idler pulley to supplied bracket, use supplied (**.390”**) step spacer against the adjustable idler bracket. Sandwich the smooth 70mm idler pulley (**#36101 or #9100159**) to step spacer and supplied step washer to front side of idler. Install supplied “tee” nut to the back side with the offset hole facing the driver side. Secure with the supplied ½”-13 x 1 ¾” SHCS. **TIP:** Use light amount of anti-seize on threads of supplied bolts.

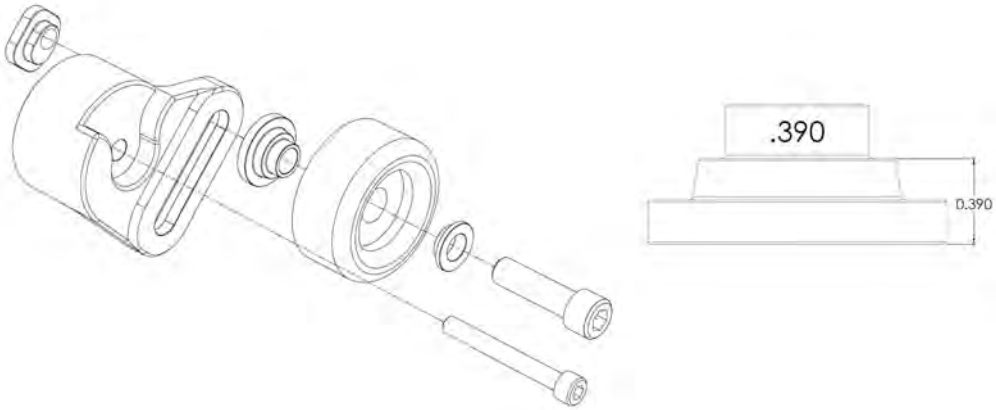

71. Assemble spring-loaded tensioner by mounting supplied spacer with female register to tensioner. Install grooved idler pulley (**#36326**) to tensioner and (**.390”**) step spacer. Use supplied step washer to front face of pulley bearing and (1x) 10mm x 40mm SHCS (***10-Rib uses 10mm x 60mm SHCS***) bolt. Use light amount of anti-seize on threads. Torque to 18 lbs-ft. **NOTE:** Verify you’re using the proper spacer as shown.

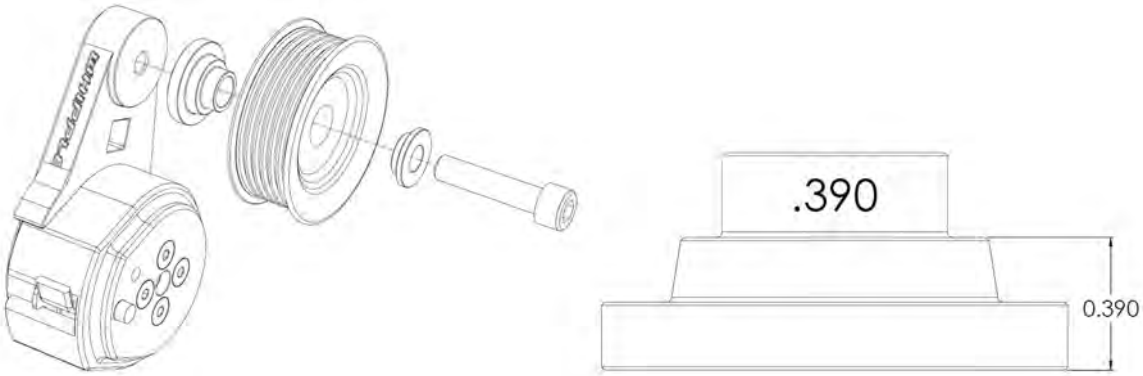

72. Remove factory plastic smooth idler pulley from the engine using 15mm socket. Replace with the supplied steel idler pulley (**#36101 or #9100159**). Use the factory fastener to secure. Torque to 18 lbs-ft with a 3/8" allen socket. **NOTE:** Image shows proper direction of idler pulley assembly.

73. Carefully bend the factory AC line down and towards RH side. Install spring loaded tensioner to plate to check clearance. You should have a minimum of 3/8" of clearance from the tensioner to the AC line.

74. Install the spring-loaded tensioner to idler plate, locating the tang into position. Secure with the supplied (1x) 10mm x 60mm SHCS. Use light amount of anti-seize on threads. Torque to 25 lbs-ft.

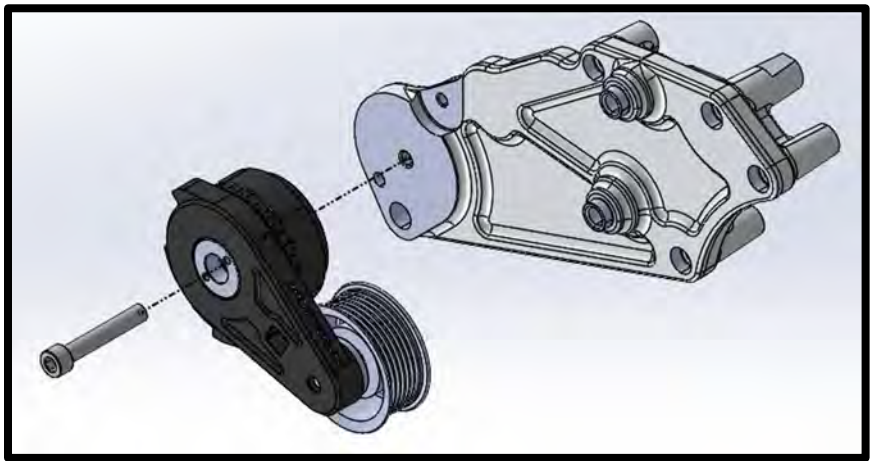

75. Install supplied (2x) smooth steel idler pulleys (**#36101 or #9100159**) to the idler plate. Secure using the (2x) step washer through front of bearing and (2x) ½”-13 x 1 ¾” SHCS (with light amount of anti-seize on threads) bolts. Torque to 30 lbs-ft. using a 3/8” allen socket.

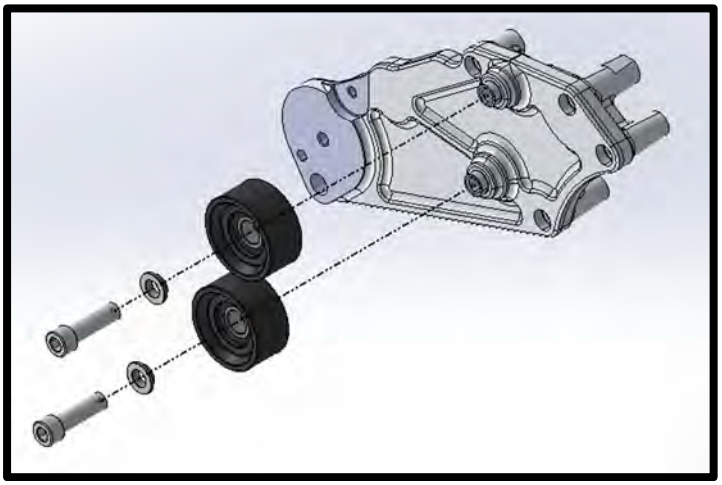

76. Install (1x) #2-109V75 oring to the MAP sensor block off, apply light amount of grease to oring. Install the MAP sensor block off with the supplied block off plate, secure using the supplied (1x) 6mm x 16mm SHCS. Torque to 70 lbs-in.

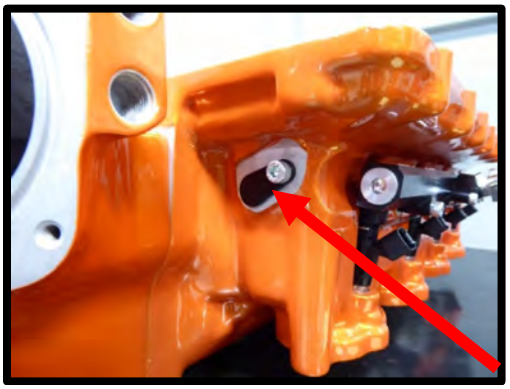

77. (**Complete Kits**) Install the supplied air temp sensor to the 3/8” NPT port on the back of the intake manifold. Be careful, as the plastic sensor can break if over torqued. Use light amount of oil on threads.

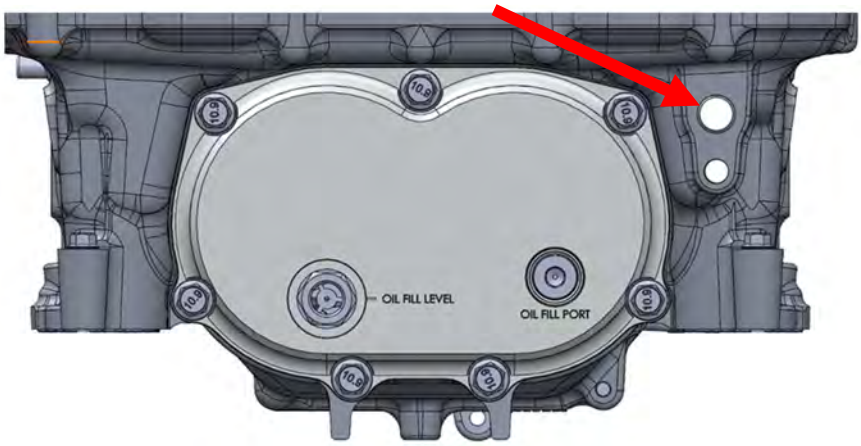

78. Install supplied (1x) #2-906 Viton oring to the 45mm long 9.49mm to -6 ORB inlet fitting. Apply light amount of grease to oring for ease of installation. Install fitting to LH fuel rail -6 ORB fitting. Install supplied plug (no pipe Teflon) to open port next to -6 ORB port.

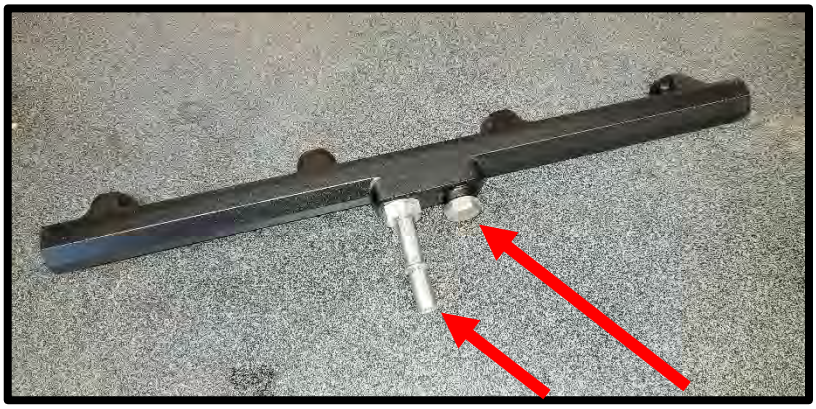

79. Apply light amount of grease to -6 ORB plug (2x), install -6 ORB plugs to front sides of RH fuel rail.

80. Install the supplied (2x) #2-906 orings to the (2x) -6 ORB to 6AN inlet/outlet fittings. Install these (2x) fittings into rear side of fuel rails. Apply light amount of grease to oring for ease of installation. Using a ¾" wrench (or ¾" deep socket) on both the front and rear fittings, tighten both.

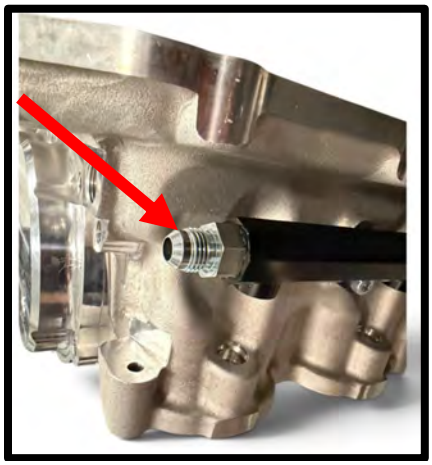

81. Install fuel injectors to the fuel rail, apply generous amount of grease to oring for easy installation. Install the supplied fuel injector position lock bracket to clock the supplied fuel injectors into proper position. While installing the lock bracket, secure the fuel injector so it does not add pressure to the injector body. **Note:** This is for dual spray pattern injectors only that must be at the correct angle. **TIP:** ***Failure to clock the injector correctly can cause severe running issues.***

82. Apply generous amount of grease to the injector orings for ease of installation. Install the fuel injectors, rails and lock bracket to the intake manifold, secure with the (4x) 6mm x 16mm SHCS using a 5mm allen socket. Torque to 90 lbs-in.

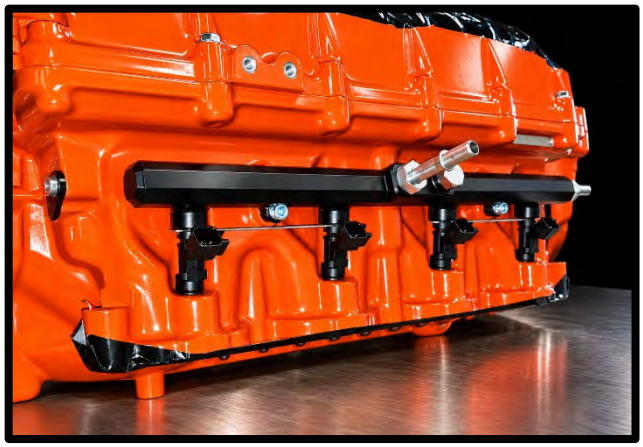

83. Install supplied 3/8" fuel cross over line around back of the supercharger, secure fitting ends to previously installed 6AN male fittings. ***NOTE:** The long 90deg end goes to **RH** side.

84. Install the supplied ¼" ID bypass actuator to the bypass nipple and ¼" nipple on SC housing. **CAUTION:** Do not open/close bypass actuator by hand. This may damage the actuator internally. It only moves properly with equal vacuum/boost at the actuator reference port. **NOTE: Install zip tie to 90deg rubber fitting on bypass actuator nipple to secure, failing to do so may end with the hose coming off during WOT operation.**

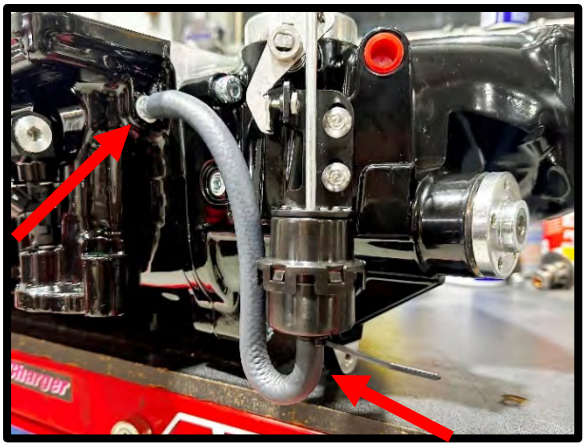

85. Using a 10mm socket, remove the (4x) 6mm flanged hex bolts securing the supercharger lid to housing. Remove the lid from the housing. Set the lid and intercooler assembly on a padded surface so no damage can occur to intercooler cores.

86. Install the supplied (8x) manifold orings to the Whipple intake manifold to cylinder head surface, apply light amount of grease to ease installation.

87. Make sure the supercharger is on a flat surface. Remove the oil fill plug using an 8mm allen socket.
    - Fill the compressor to the **MIDDLE** of the sight glass (**4.0 FL/OZ**). Rock compressor back and forth. Then spin the compressor/rotors by the pulley so the oil fills the bearings. **NEVER OVER FILL THE SUPERCHARGER!**
    - Apply light amount of grease to oil fill plug oring, reinstall. Torque to 140 lbs-in.

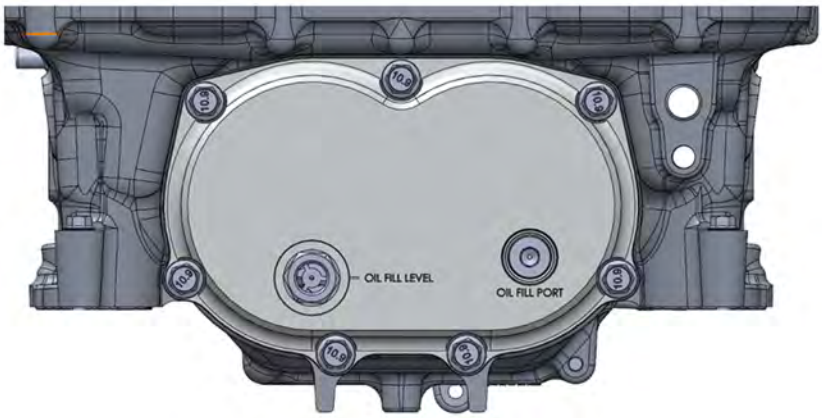

88. Using a hack-saw or cut off wheel, remove the 3rd wire loom support mount (from front) from both valve covers. Cut flush and grind the edge for a clean cut. **NOTE:** This is needed to clear fuel rail connector.

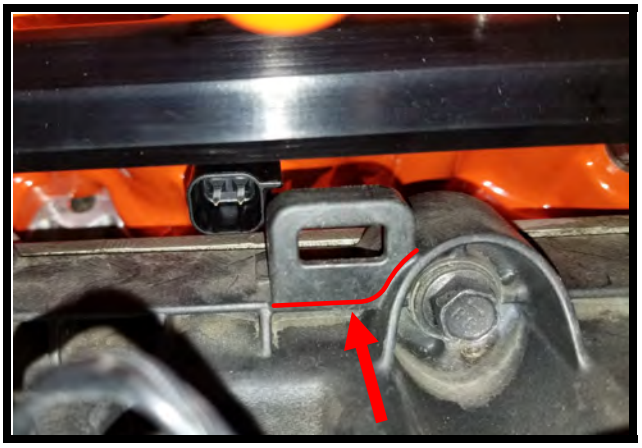

89. Install supercharger housing (without lid) to the engine. Use the supplied (4x) 6mm x 45mm HHFCS on the outer bolt holes and (6x) 6mm x 75mm HHFCS bolts with the supplied (6x) #2-009 orings on the bolt, under the head to the inner bolt bosses. Use **Blue Loctite #243** on the threads of each bolt. **Leave hand tight for now**.

90. Using 6mm allen socket, secure the (1x) 8mm x 70mm SHCS to pull SC forward to plate. Torque to 22 lbs-ft. **NOTE:** Failure to do so could cause belt alignment issues.

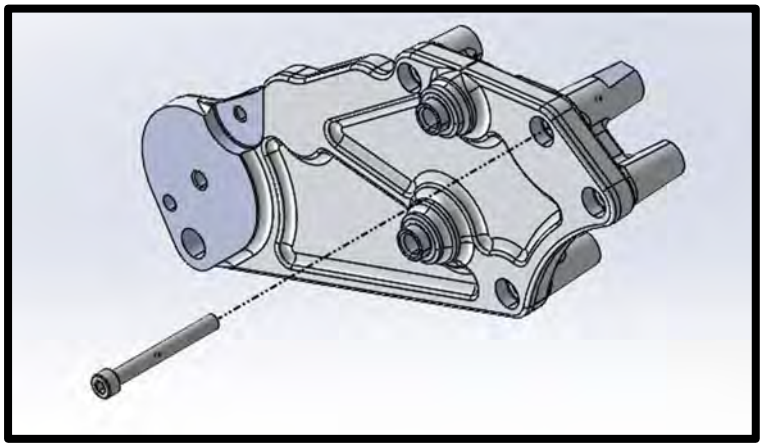

91. Torque the (10x) 6mm HHFCS manifold bolts in the following pattern using a 10mm socket. First pass: 88 lbs-in. Second pass: 106 lb-in. **NOTE:** For bolt #10, a ¼" socket with 4"-6" extension, 10mm wobble is the best possible tool to get into this tight area.

92. Reinstall the water pump pulley using a 10mm socket, torque to 14 lbs-ft.

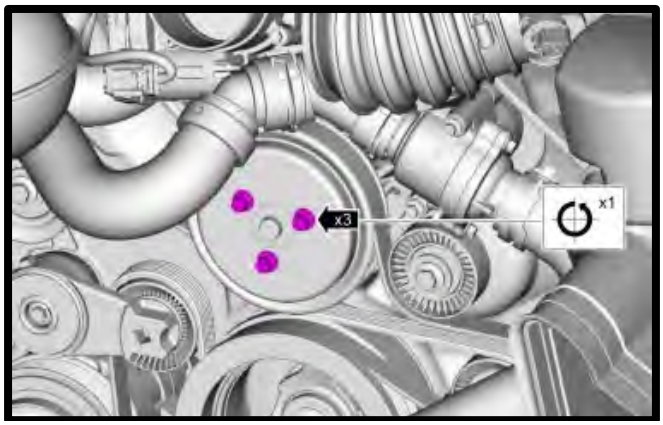

93. Install the supercharger pulley using the supplied (5x) 6mm x 15mm SHCS using a 5mm allen socket. Leave hand tight until after belt installation.

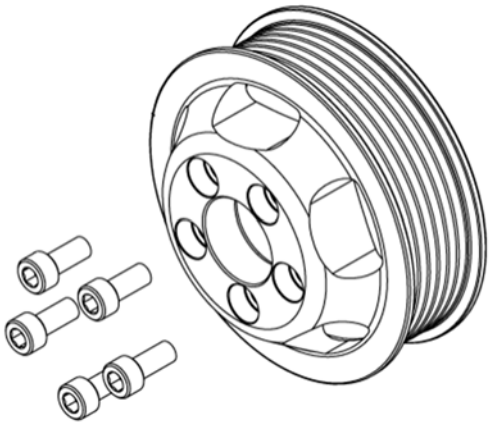

94. Install supplied supercharger belt by following the routing diagram. Once in position, lock the adjustable idler pulley by torquing the SHCS to 30 lbs-ft. **NOTE:** Set the tensioner position so the arrow points to **100** (80%-85% travel) or **LINE UP** the **ARROW** to **LINE**, by removing slack via the adjustable idler pulley. If setup at max open position, the tensioner will consistently hit its stop. If setup near its full close position, then the tensioner will not continue to apply torque to the belt during belt stretch and will allow it to jump or walk.

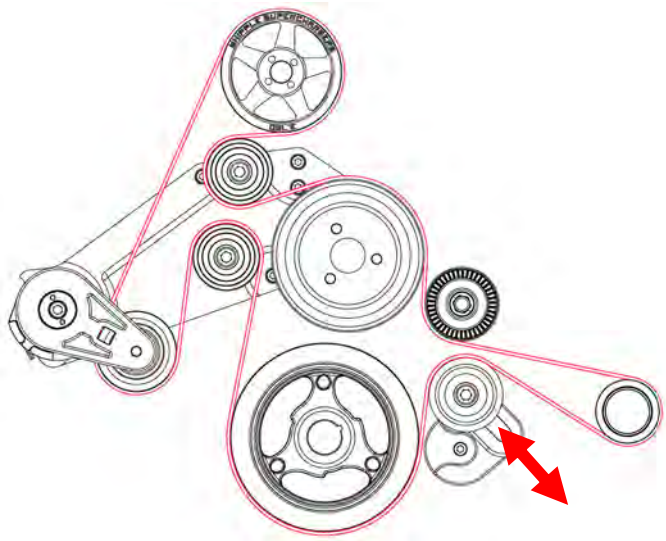

95. With the belt holding the SC pulley in position, torque the supercharger pulley bolts (5x) 6mm x 15mm SHCS bolts to 130 lbs-in using a 5mm allen socket. Do not use Loctite on threads, it's not required.

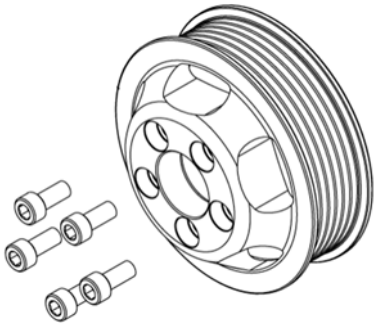

96. Connect the fuel injector electrical connectors until they click and lock in place.

97. Connect the previously installed MCT pigtail (IAT2 Manifold Charge Temperature) to the pre-installed MCT sensor located on rear of supercharger housing. **NOTE:** Failure to connect to proper IMRC connect puts the system into limited power mode. ***Competition Kits****: MCT pigtails are not included. Contact your tuning shop for proper wiring and sensor if you want to add post intercooler temps to PCM.*

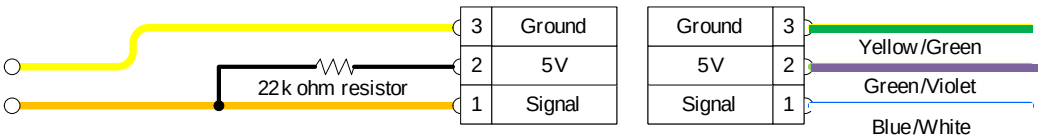

98. Using the supplied 5/16” OD silicone tube, install the (1x) 80 1/2” cord. Start as shown with green arrow, go in a clockwise motion, to the front, then around the perimeter. End at yellow arrow position. Bunch it up so it has no gap at the end as any gap will be an air leak of un-intercooled air. Install the (1) 6.5” cord in the front section shown with the blue arrow.

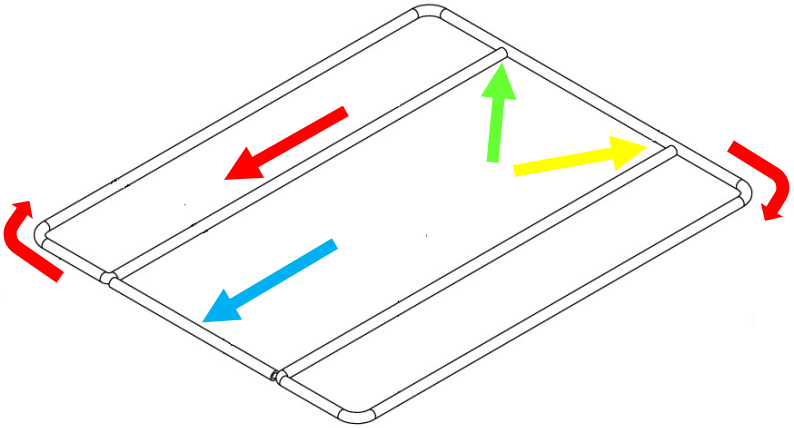

99. Install the supplied .103” OD lid seal oring (**bag PN #3102915**) to the top sealing surface of the SC housing. Apply generous amount of grease to help ease the oring into place. **TIP:** To install oring into dove-tail groove, press vertically, vs sliding finger along.

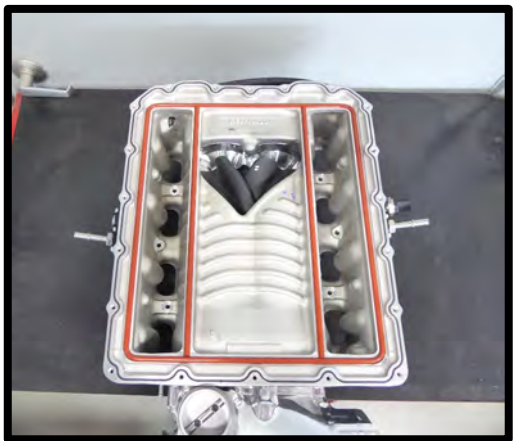

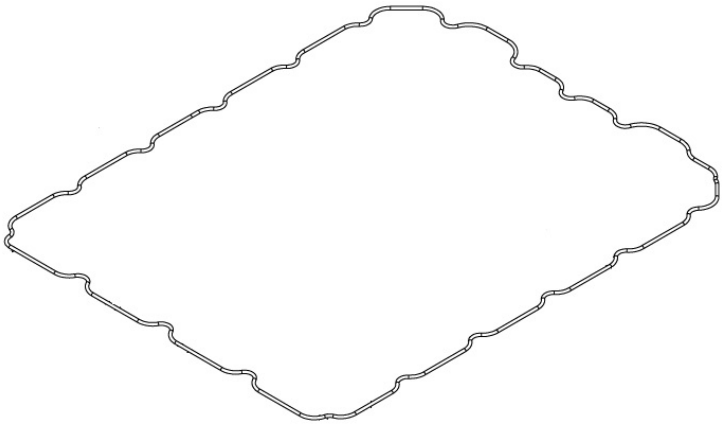

100. Install (1x) #2-230 internal bypass oring to the lid bypass passage. Use generous amount of grease to secure oring in place and help with installation.

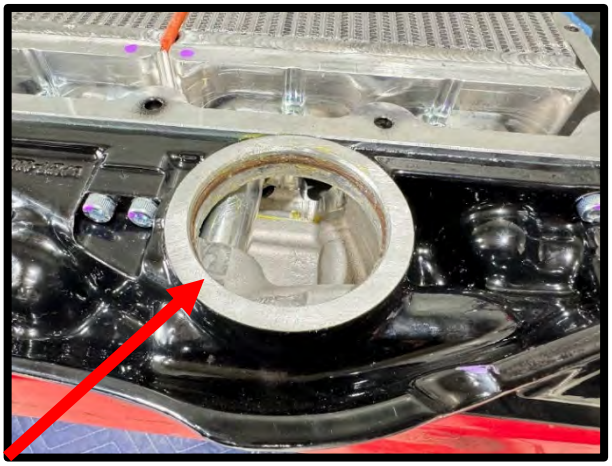

101. Apply generous amount of grease to the (1x) #2-230 Viton bypass oring. Install the supercharger lid to the supercharger housing by carefully placing the bypass passage down on inlet bypass passage. Secure the SC lid using the (17) 6mm x 30mm HHFCS and (3) 6mm x 70mm HHFCS (***marked green***) using the following pattern. Torque to 90 lbs-in using an 10mm socket.

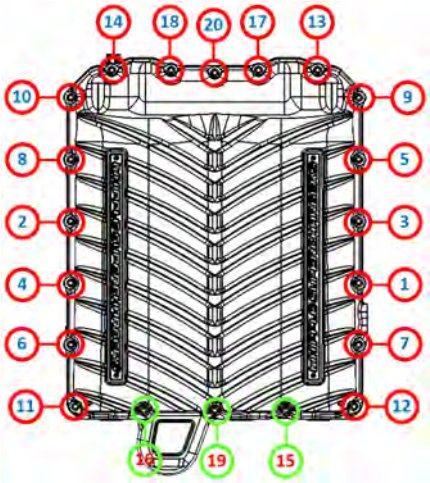

102. Install (4x) 2-117 IC fitting orings to the (4x) IC fittings. Apply grease to the (4x) 2-117 IC fitting orings. Slide fittings into lid. Secure fittings with supplied fitting retainer bracket and (2x) 6mm x 12mm SHCS bolt. Torque to 80 in-lbs.

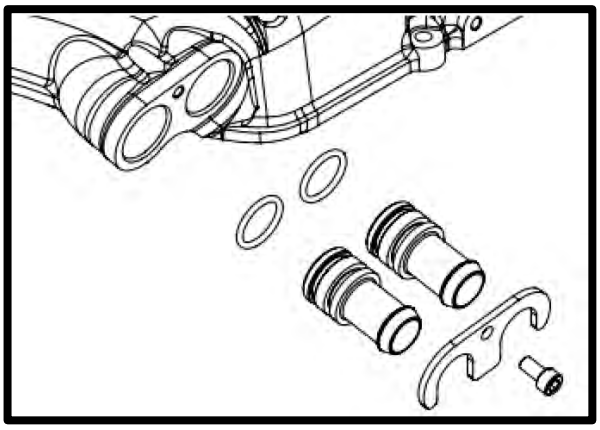

103. Connect the supplied (**#3103054**) 3/8" x 11" fuel line to the factory fuel connection at firewall and then the fuel rail inlet fitting.

104. Install the (2x) supplied 6AN viton oring (#906) to the (2x) -6 ORB to 9.89mm quick connect fittings. Install these fittings to the passenger side lower 6AN fittings on the inlet using an 11/16” socket.

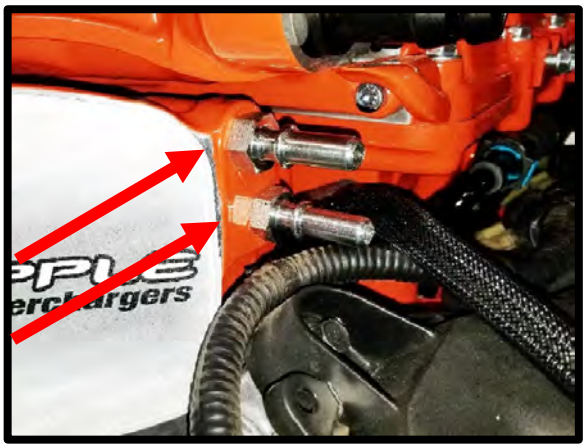

105. Install EVAP adapter block to supercharger lid, LH side using the supplied (2x) 6mm x 25mm SHCS. Torque to 80 lbs-in. Install EVAP solenoid to adapter using supplied (2x) 6mm x 25mm HHFCS bolts with electrical connector facing the rear of engine. Torque to 80 lbs-in. Install supplied (1x) 9.89mm fitting to adapter.

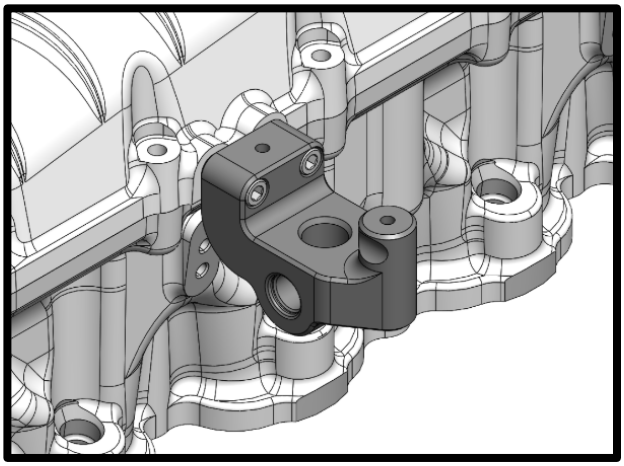

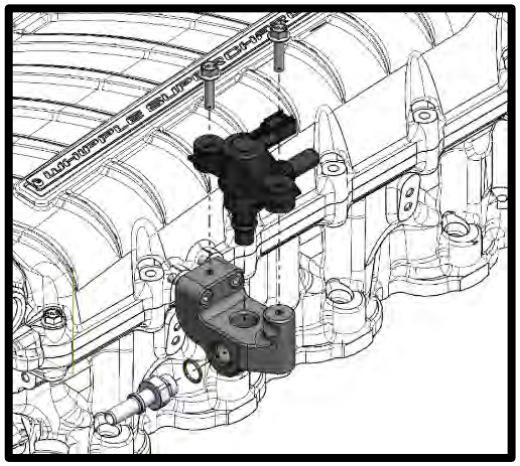

106. Install the supplied (2x) 9.89mm to 3/8” QDC fittings into supplied 3/8” ID 90deg hose (**#3103181**). Connect QDC to the EECPV 9.89mm fitting and **upper** quick connect fitting at SC inlet. Push until it clicks and locks into place.

107. Install the supplied 3/8” x 20 ½” hose with dual 90deg 9.49mm quick connect fittings from the EVAP solenoid rear fitting to the EVAP fitting located under the brake booster.

108. Install the supplied 3/8” ID hose (**#200-3103604**) brake aspirator hose to brake booster. Route from brake booster to the **lower** quick connect fitting on the supercharger inlet. Push until it clicks into place. **TIP:** For best routing, nestle in between cam cover and fuel rail, under the wiring and heater hose.

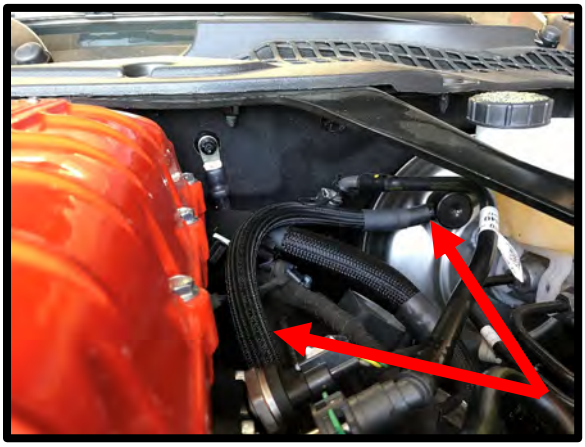

109. Install the (1x) supplied -6AN viton oring (#906) to the (1x) -6 ORB to 15.82mm quick connect fittings. Install this fitting to the RH side 6AN fittings on the inlet using a 7/8” wrench.

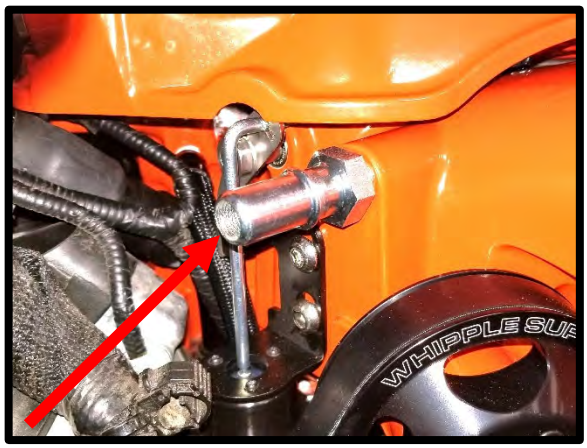

110. Install the supplied 1/2" ID x 9" hose (**#3102696/5000387**) to the passenger side valve cover. Connect other end to the supercharger inlet quick connect fitting. Push until it clicks and locks into place.

111. Connect the previously routed Manifold Charge Temperature pigtail to the MCT sensor located in the back of the intake manifold.

112. Mustangs equipped with the Performance Package must remove the (2x) front support braces connecting the front bumper support to the upper radiator support. Remove the (4x) bolts per bracket and remove brackets from vehicle.

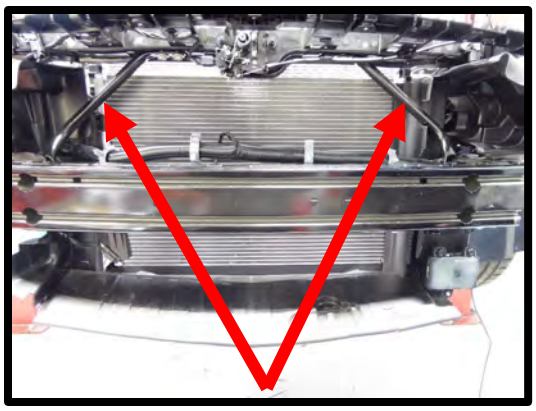

113. (**Dual fan installation**) Install the (8x) supplied rubber feet to the fan mount bosses.

114. (**Dual fan installation**) Install the supplied (4x) rubber strips to the bottom flat portion of the fan mount brackets. Clean the brackets with soap and water. Remove the protective tape from the rubber strip and install to the bracket.

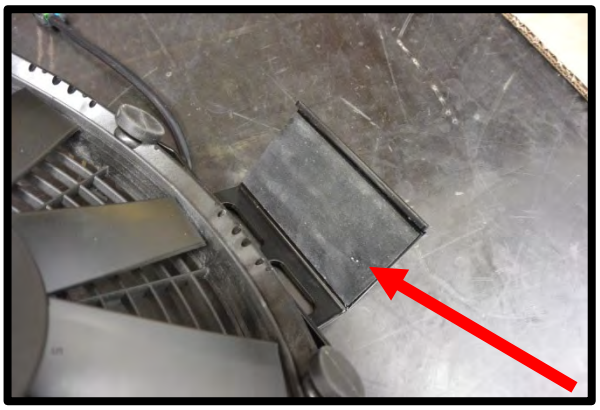

115. (**Dual fan installation**) Install the (4x) brackets to the fans by sliding the square tab into the fan notch and the steel channel bracket will slide on the outside. The angled side will face the fan. This slides together easier if the bracket is facing slightly up. Once these are lined up, push until the seat together. Repeat on the other (3x) brackets. Leave nyloc nuts loose for now.

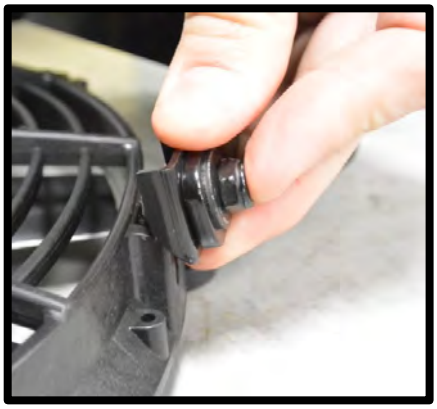

116. (**Dual fan installation**) Carefully set both fan assemblies on top front of the LTR, space these evenly before installing.

117. (**Dual fan installation**) Carefully pull open brackets and push onto the LTR. Its best to do both ends at the same time otherwise the bracket can be at an angle and hard to get on. **NOTE**: Electrical connectors should face down.

118. (**Dual fan installation**) Carefully snug up the (8x) nyloc nuts using a ¼" ratchet and 10mm socket. Do not over tighten.

119. Install the supplied (4x) rubber grommets to the LTR mounts. Install the supplied (4) aluminum LTR spuds to rubber grommets installed in LTR.

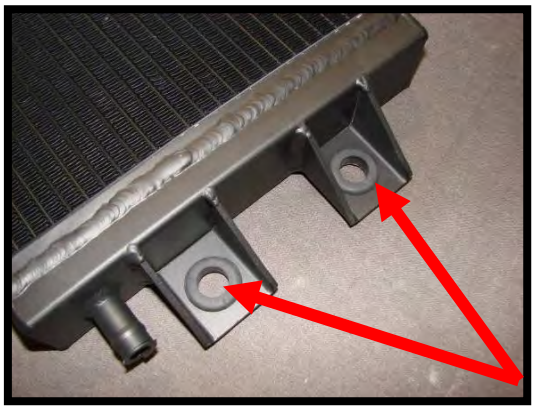

120. Install the LTR brackets to the LTR using the supplied (4) 8mm x 35mm FHSCS bolts through the aluminum heat exchanger spuds (5mm allen socket). **NOTE**: HD heat exchanger mounts the same way but the inlet fitting moves to RH side (same as outlet).

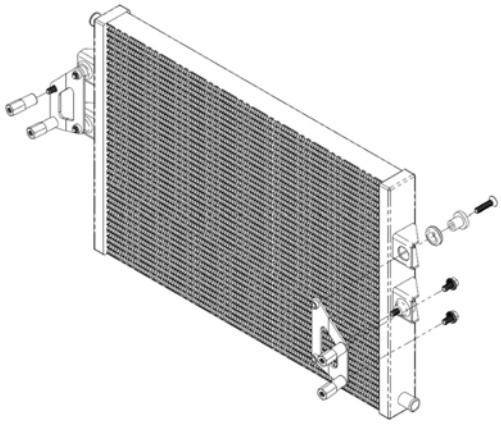
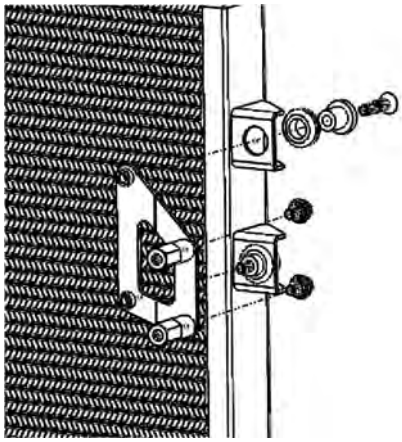

121. Install the supplied (4x) hex coupling nuts to the factory bolt threads on the back side of the front bumper support (2 LH side, 2 RH side) using a 16mm wrench.

122. (**HD LTR installation**) Remove the factory plastic support clamps from the wire harness. Use a flat blade screw driver to open. Use a plastic pin pry tool to remove the clamps from the vehicle.

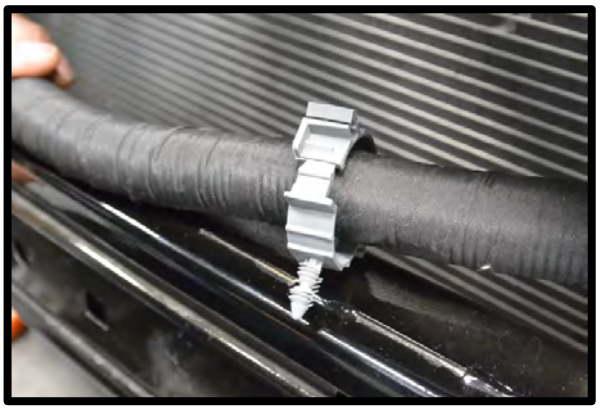

123. Slide the LTR assembly up from the bottom. Connect the LTR brackets to the coupling nuts using the supplied (4x) 8mm x 16mm hex headed flanged bolt (13mm ratchet wrench).

124. (**Dual fan installation**) Use the original plastic zip-tie push pin into the two innermost holes. Use (2x) new zip-ties to secure harness back in place. Push harness back in between brace and dual fans.

125. With the LTR mounted, mark the centerline of the LTR fitting and horizontally center of the plastic radiator (passenger side) shrouding. Verify on the back side of the shrouding that you have proper clearance for the ¾” hose and Y fitting. Using a 1 ½” hole saw, drill a hole through the plastic shrouding. Install the supplied 1 ½” rubber grommet into this hole. **NOTE:** Install hole and grommet as close to the plastic edge as possible. This gives proper clearance on the opposite side for the Y fitting.

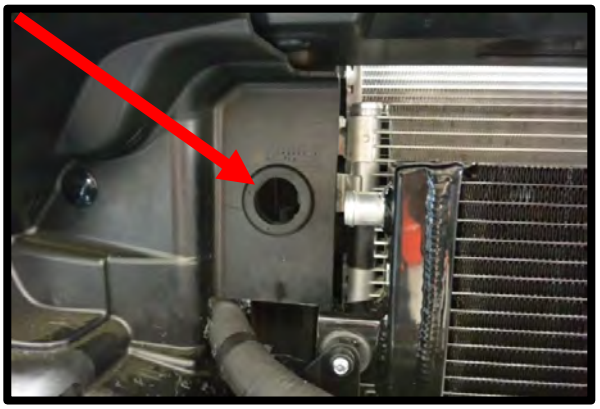

126. Route the supplied 90deg intercooler feed hose **#200-3103614** through the grommet, cut to fit as needed. Install the supplied Y fitting to the end of the hose from the outlet of the LTR, just after the grommet. Secure hose to LTR and hose to Y fitting using supplied #12 worm clamps.

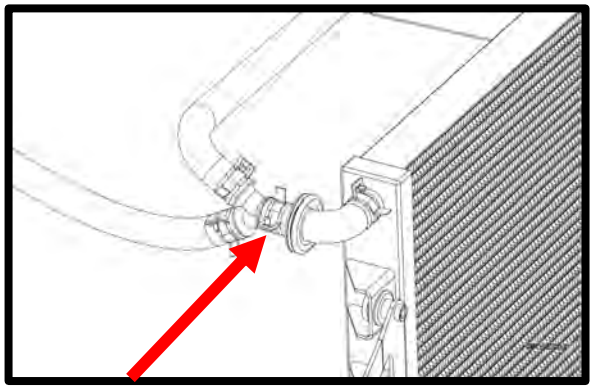

127. Connect the ¾" lower leg of Y fitting to RH IC inlet, hose **#200-3103612**, secure with #12 black worm clamp. Route to RH intercooler inlet, the rear most water cross fitting. Secure with the supplied #12 black worm clamp. For proper hood clearance, ensure that the hex of clamp is not on top.

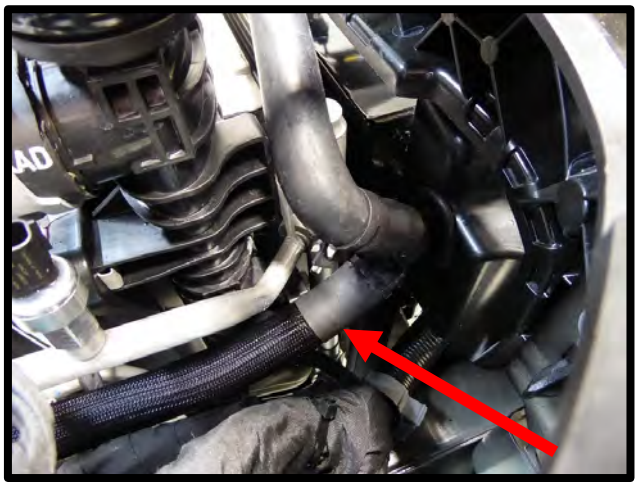

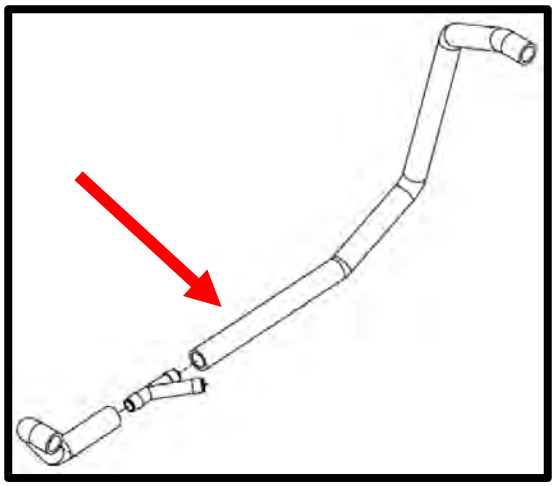

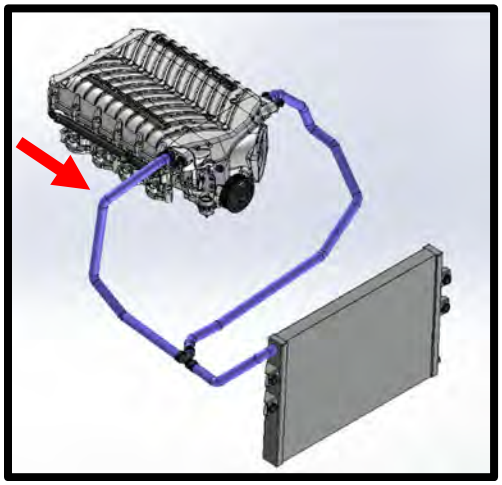

128. Install the supplied molded ¾" hose **#200-3103612** to upper Y-fitting and secure with constant tension clamp. The straight end goes to the Y. Route between the engine and radiator to LH side of vehicle. Leave this end loose until airbox installation. Secure hose to factory heater lines using zip-ties. **NOTE:** Failure to secure line will result in hose hitting belt system.

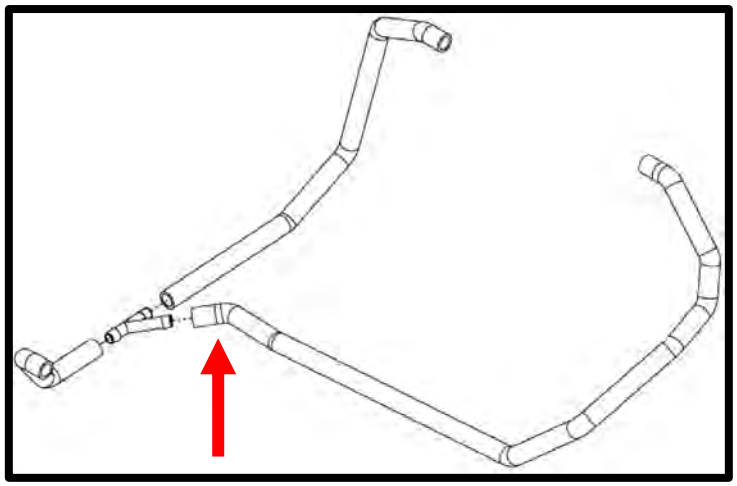

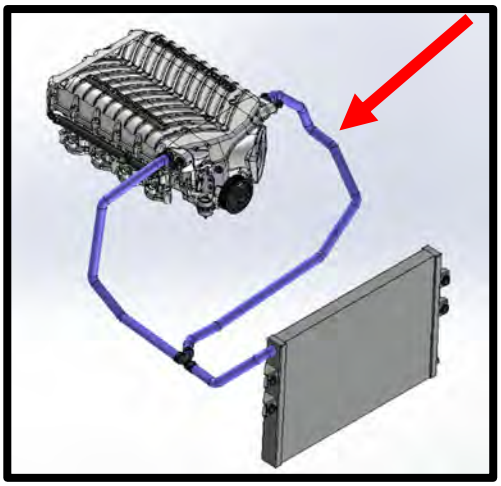

129. Install supplied molded ¾" hose **#200-3103610** from **LH forward** most IC fitting (outlet). Secure hose to IC fitting with #12 black worm clamp. Install **TEE** fitting with **TEE** facing forward. Install supplied 90deg hose **#200-3103611** to end of **TEE**. Install IC reservoir to 90deg hose (will mount to airbox at later step). Secure with #12 worm clamps.

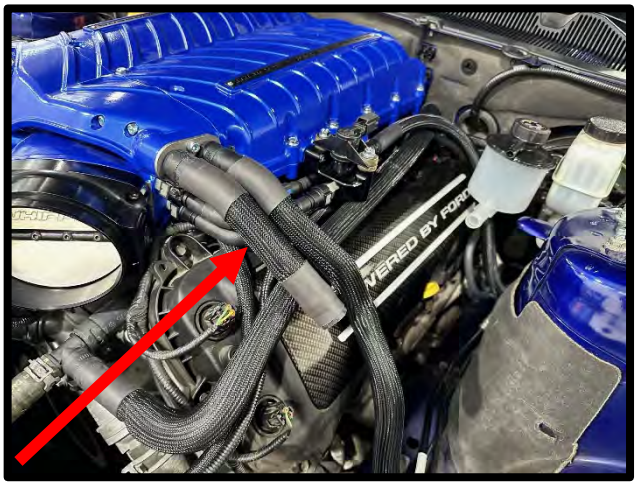

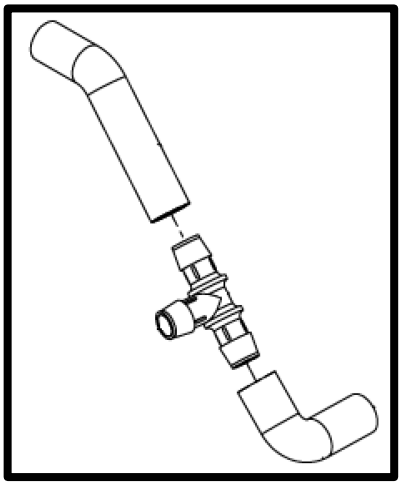

130. Install supplied molded ¾" hose **#200-3103609** to forward facing barb of IC oulet **TEE** fitting you previously installed (30 deg bend goes to TEE). Route other end of hose to forward most intercooler fitting on RH side. Secure with #12 worm clamps. **NOTE**: Route below the wiring loom then around the front of the engine, just below the radiator hose. It should then run next to the bank 1 intercooler feed line **#200-3103612**, then to the tee fitting.

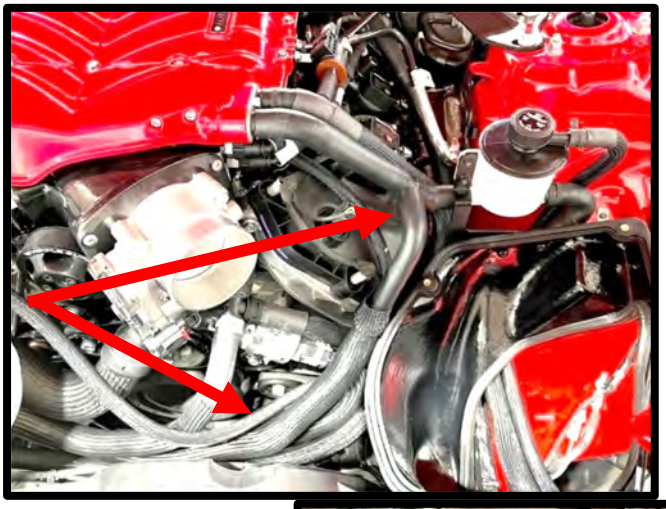

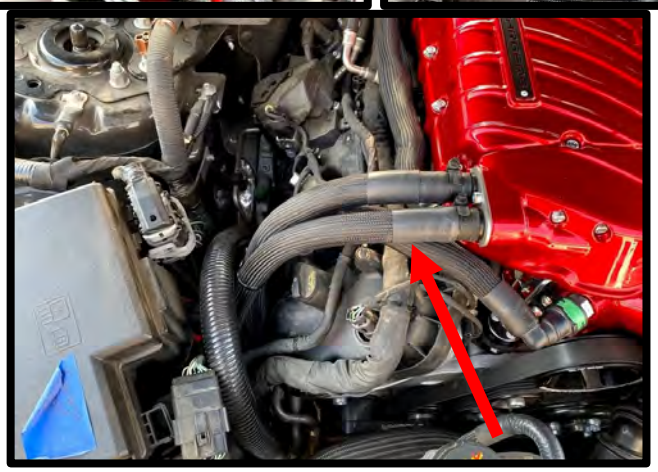

131. Install the supplied ¾" molded hose, **#200-3103615** to filler reservoir barb facing LH side, secure with #12 worm clamp. Install the supplied 3/8" reservoir vent hose, **#3103098** to 3/8" reservoir barb, secure with supplied #6 worm clamp. Route this and the IC reservoir outlet hose down frame to inner fender area.

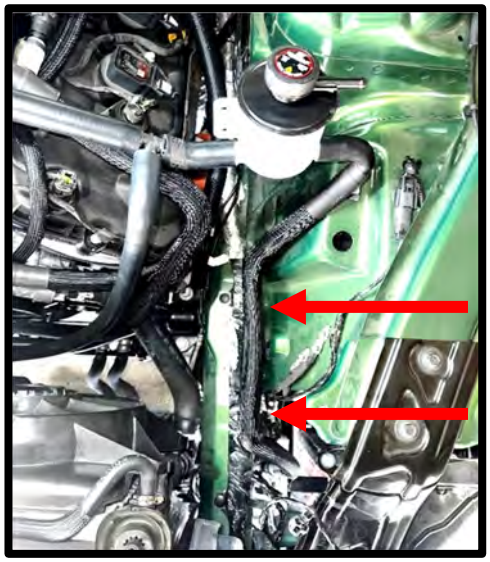
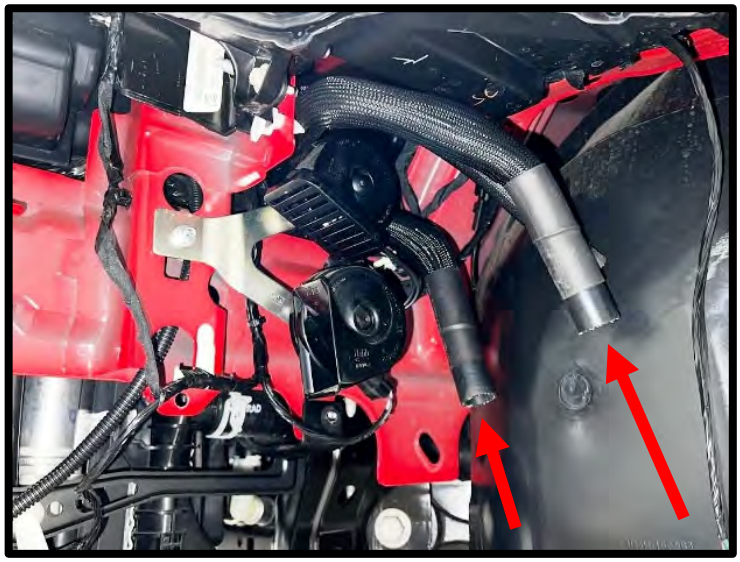

132. Install IC pump bracket to body, using the (2x) 8mm x 25mm HHFCS from backside, then (2x) 8mm lock washer, (2x) AN washer and (2x) 8mm flanged nut.

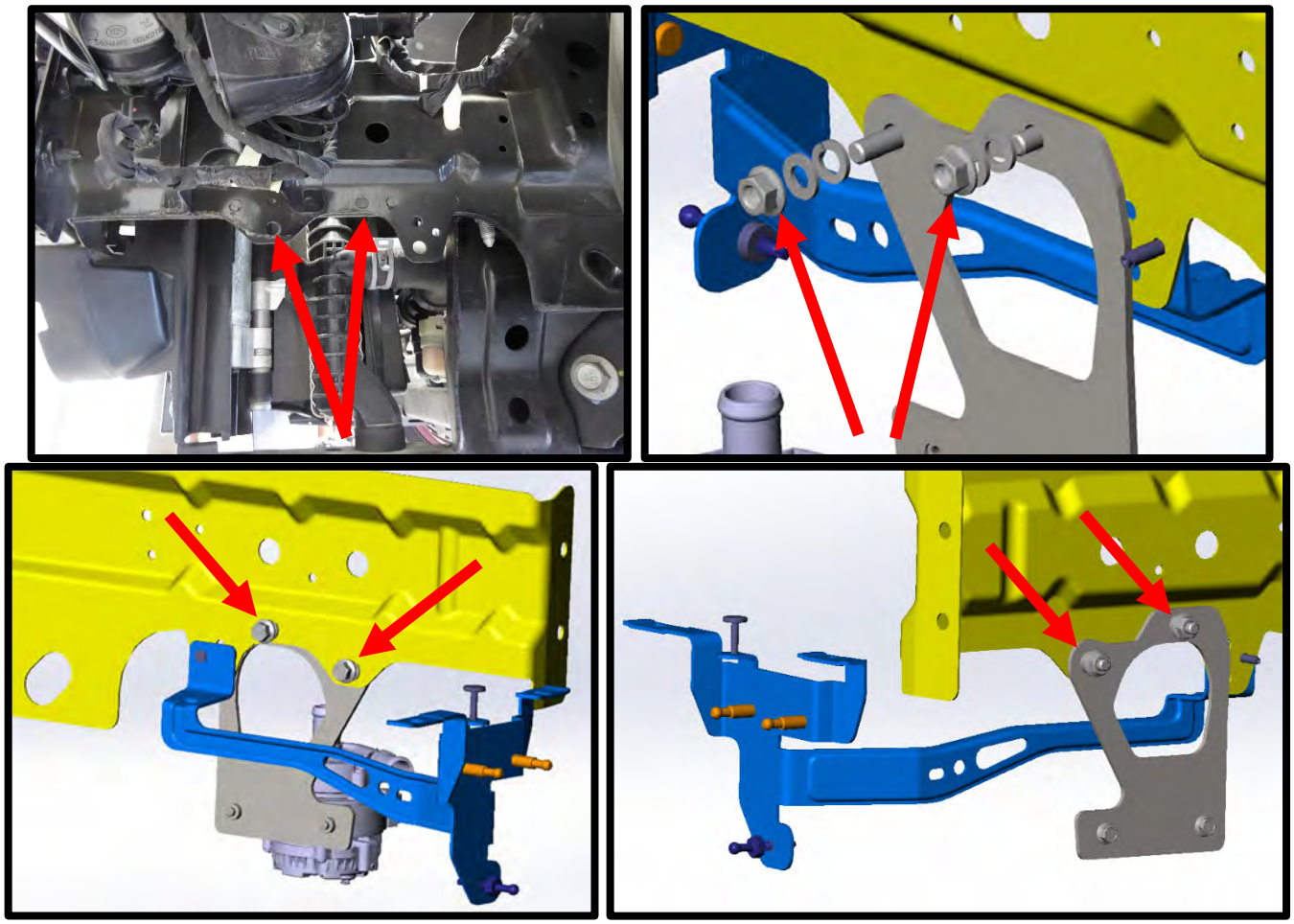

133. Install the T-Bolt clamp around the IC pump. Install IC pump to pump bracket using the (2x) 6mm x 12mm HHFCS bolts.

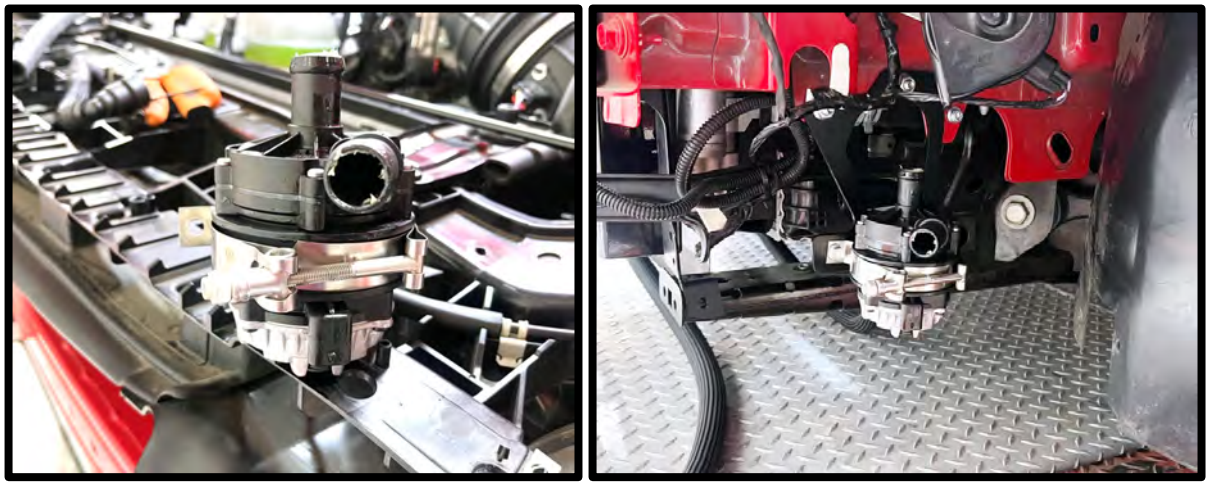

134. (**Standard single pass LTR**) Install the supplied molded ¾" hose **#200-3103629,** from IC pump outlet to LTR inlet and secure with supplied #12 worm clamps.

135. (**HD dual pass LTR**) Use the supplied ¾" hose coupler and (2x) #12 worm clamps to couple to **#200-3103629** hose to the ¾" x 31" extension. Route the 180deg end to the LTR inlet. Secure using #12 worm clamp.

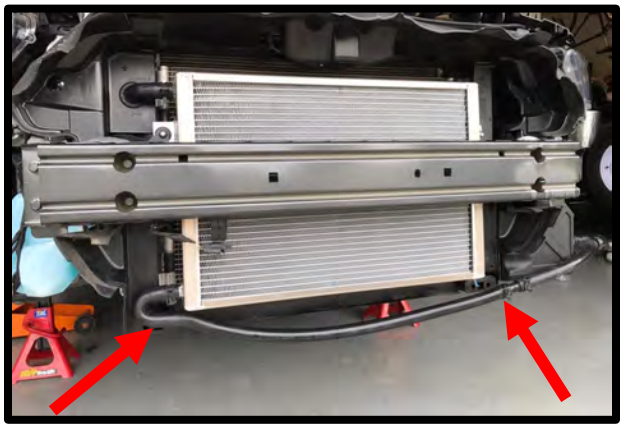

136. Connect previously routed, reservoir outlet hose **#200-3103615** to IC pump inlet. Secure using #12 worm clamp.

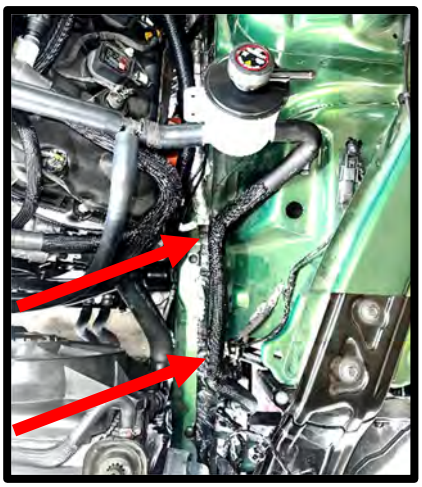

137. Connect the intercooler pump electrical connector to pump until it's fully seated. Zip tie wires for clean installation.

138. Install the supplied electronic throttle pigtail to the factory electrical connector. Push until it locks in place, then lock the safety lock. Route to LH side of vehicle for later connection to throttle body. **TIP:** When pressing together, hold the wires vs connector to ensure the wires do not come loose during connection.

139. (**Stage 1**) Install throttle body adapter to supercharger inlet using the supplied (4x) 6mm x 14mm FHCS (4mm allen socket) using the supplied gasket between TB adapter and SC inlet. Use **Blue Loctite #243** on the threads of each bolt. Torque to 88 lbs-in. Install the stock throttle body using the (4x) 6mm x 50mm FHSCS bolts using a 10mm socket.

140. (**Stage 2 Whipple 132mm Crusher throttle body**) Install throttle body to supercharger inlet, use the supplied gasket between TB adapter and SC inlet. Secure with the supplied (4x) 6mm x 25mm SHCS using a 5mm allen socket. Torque to:
   - *First pass, 85 in-lbs.*
   - *Second pass, 139 in-lbs.*

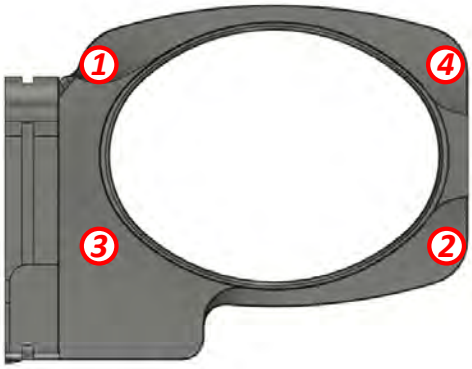

141. Connect the previously installed throttle extension pigtail to the throttle body electrical connector. Secure wiring using zip-tie. **NOTE: Failure to secure wire may result in the wire catching the belt system!**

142. Install the supplied 38” 90deg rubber weather stripping to opening of airbox. This seals the bottom of the box to the inner fender area.

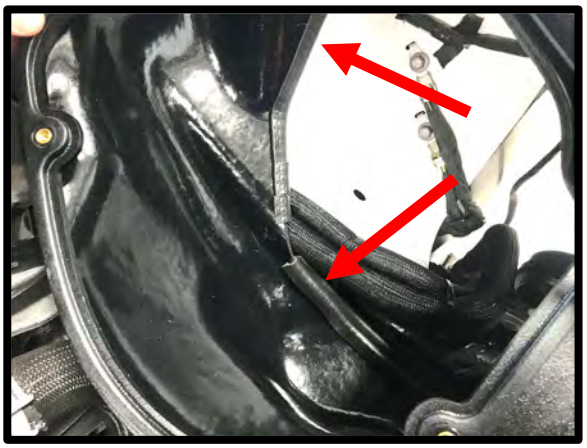

143. Install the supplied lower airbox to the vehicle by slipping over the factory air duct. Make sure the ¾” and 3/8” IC tank to filler tee hoses go in the allotted area. These should be zip-tied together for clean installation and free of any kinks.

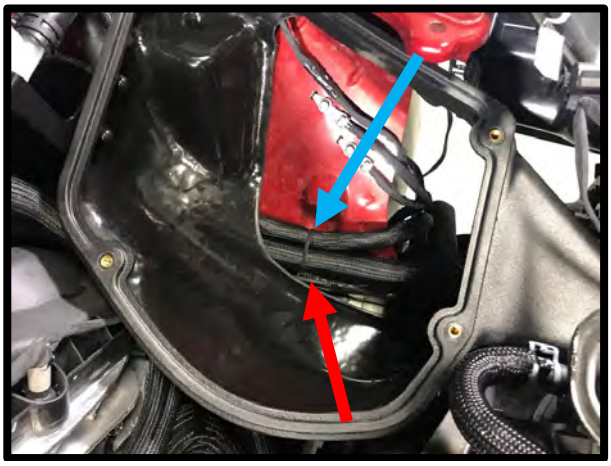

144. Install the factory MAF sensor element into the new MAF housing using the supplied (2x) 4mm x 6mm SHCS. Torque to 17 lbs-in. ****DO NOT USE STOCK BOLTS**. *TIP: Verify arrow position for airflow direction.**

145. Install the steel MAF mounting plate to the airbox lid (to the inside of box). Install the (4x) 5mm x 8mm FBHSCS bolts to secure plate to airbox lid. Install the MAF housing to the lid and venturi using the supplied (4x) 6mm x 20mm SHCS bolts.

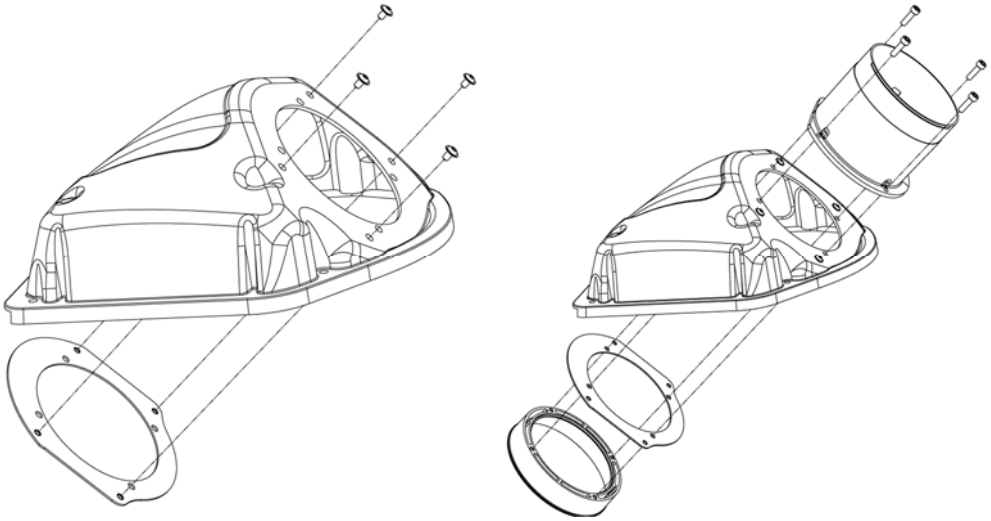

146. Install the high flow filter to the venturi ring you previously installed. Secure with supplied hose clamp.

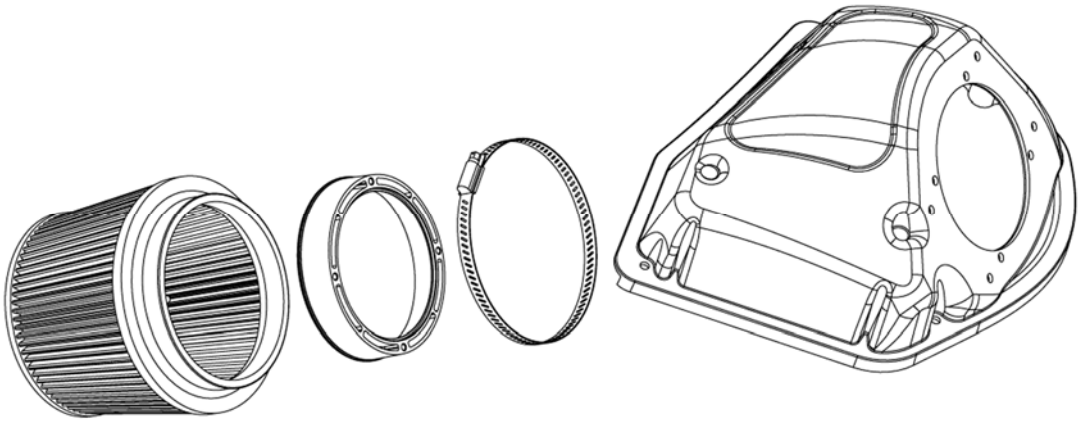

147. Install the filler tee bracket to the lid using the supplied (2x) 6mm x 14mm SHCS. Install the filler tee to the filler tee bracket using the supplied (2x) 6mm x 14mm FBHSCS bolts.

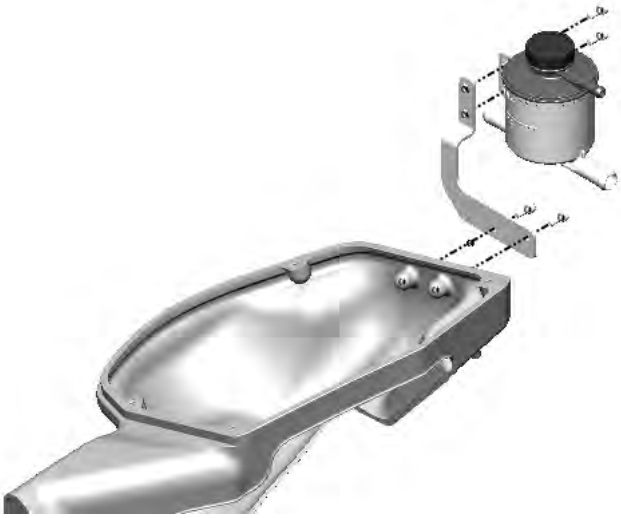

148. Install the filter lid to lower airbox by sliding filter into lower and tilting MAF side up. Once filter is in, you can lower the MAF side. Install the supplied heat shield to the front bolt hole closest to the radiator. Secure heat shield and the rest of the airbox lid with the (4x) 6mm x 12mm FBHSCS bolts. Install the supplied 11" long rubber weather stripping to the top and rear lip of heat shield.

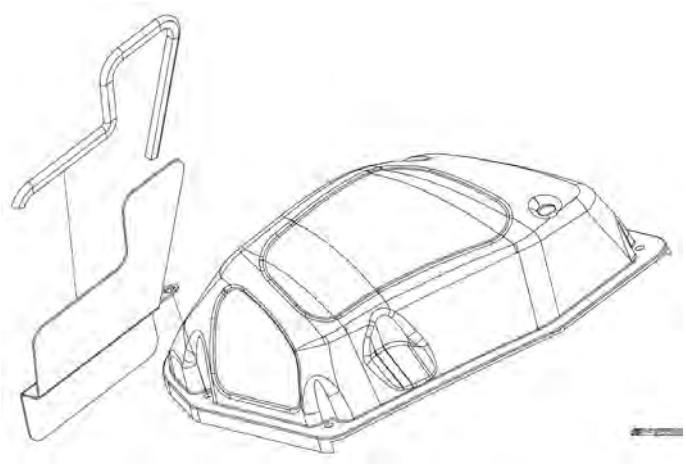

149. Install the supplied 3/8" to 15.82mm hose adapter to the SC inlet tube.

150. Install the inlet tube to the MAF and throttle body. Secure using the supplied clamps. #80 on MAF side, #56 for stock TB, #80 for 132mm TB, #88 for 150mm TB. Reconnect MAF connector to MAF sensor. Remove plastic Christmas tree from harness.

151. Secure driver side vent line quick connect fitting to the 15.82mm QDC fitting in the inlet tube previously installed.

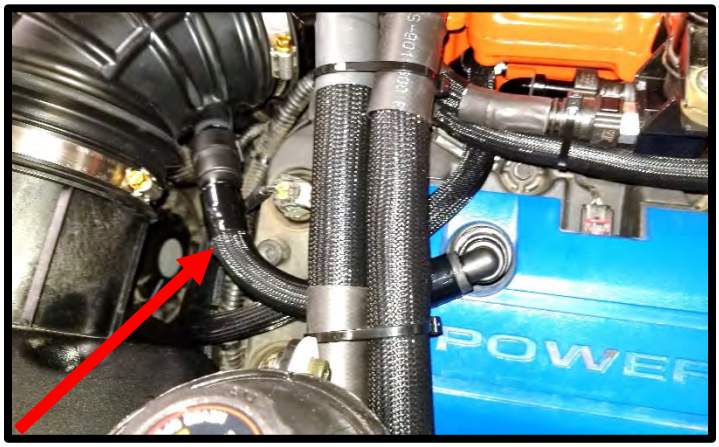

152. Connect the previously routed ¼" to 3/8" vent line (**#200-3103627**) to the stock overflow tank, secure with stainless clamp. Secure this hose to the radiator hose and heater hose using multiple zip-ties. **NOTE:** Failure to secure line could result in getting caught in belt system.

153. (**Stage 2**) Locate the supplied DW400 fuel pump kit. Remove the OE pump connector harness and fuel level sender.

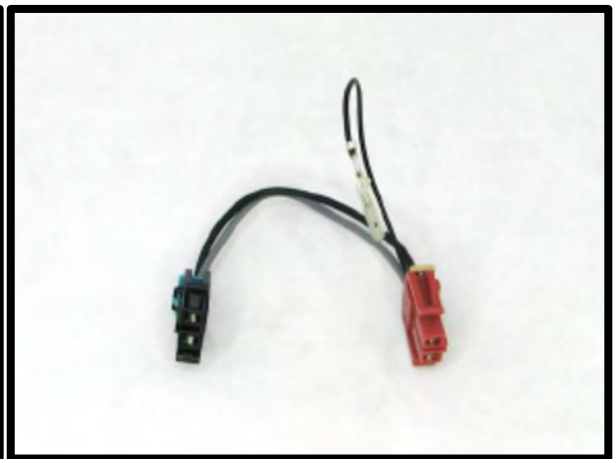

154. (**Stage 2**) Cut the smaller venturi outlet hose (1/8” ID) and remove the center section of the assembly by depressing the (3) tabs (circled in green) around the perimeter and pulling the center up and out of the bucket assembly.

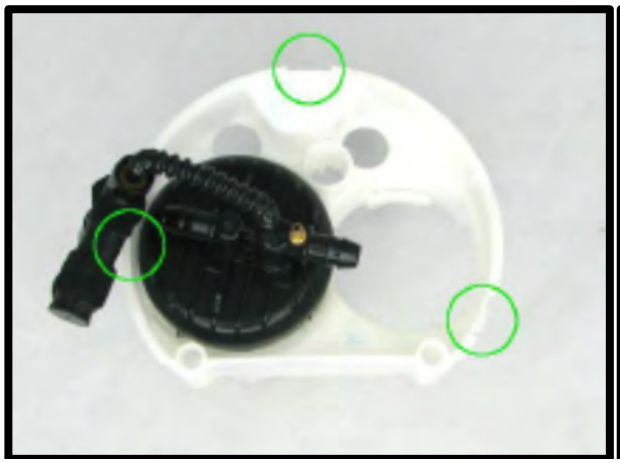

155. (**Stage 2**) Carefully cut the larger pump outlet hose (3/8” ID) from the assembly filter and remove the OE pump.

156. (**Stage 2**) Remove the (3) locating tabs and smooth the pump receptacle to the diameter of the DW400 (46mm).

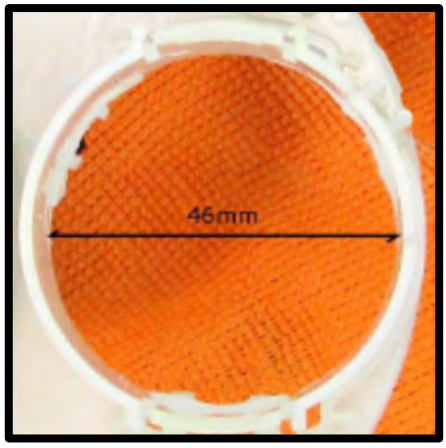

157. (**Stage 2**) Install the 3/8” tube onto the assembly filter inlet and slide on the (2x) hose clamps. Install the DW400 into the pump receptacle and install the 1/8” hose onto the venturi inlet receptacle of the assembly bucket.

158. (**Stage 2**) Install assembly center section into the assembly bucket and connect the 3/8” tube to the outlet of the pump, then tighten the hose clamps. Slide the larger permanent clamp (13/32”) onto the hose and crimp it in place (over the barbs) with a pair of side-cutters. Slide the smaller permanent clamp (11/32”) on the hose and install the free end on the smaller venturi outlet on the pump. Crimp the clamp in place under the barb. **NOTE**: Removing the assembly top-hat from the assembly center section will allow for more room to work to install the components. **NOTE:** The plastic hose is a very tight fit, in some cases you may need to use hot water to expand for installation. For this, install hose end into boiling water for 5-10 seconds and then press on to pump.

159. (**Stage 2**) Install the new connector harness supplied with the DW kit, the additional static ground inserts into the slot on the assembly filter, the same as OE.

160. (**Stage 2**) Reinstall the hat to the assembly in the center/buckets assembly and connect the electrical connector harness to the hat assembly.

161. (**Stage 2**) Reinstall the assembly into the fuel tank and attach supplied hose to the outlet of the pump assembly allowing it to drain into a fuel safe container and prime the fuel pump assembly. Attach the supply line to the outlet of the pump assembly.

162. Reinstall the factory K-Brace by lifting up the cowl trim panel and sliding the K-Brace underneath. Reinstall the K-Brace over the studs and into position on the vehicle. Install the (2x) nuts on the studs and torque to 25 Nm using a 15mm socket. Install the (5x) mounting bolts and torque to 25 Nm using a 13mm socket. Reinstall the (7x) pushpin retainers on the cowl trim panel.

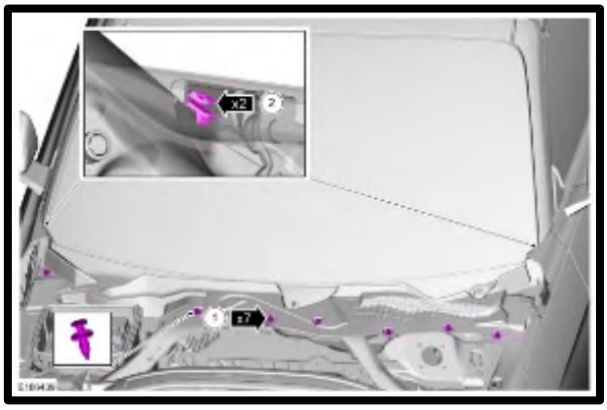

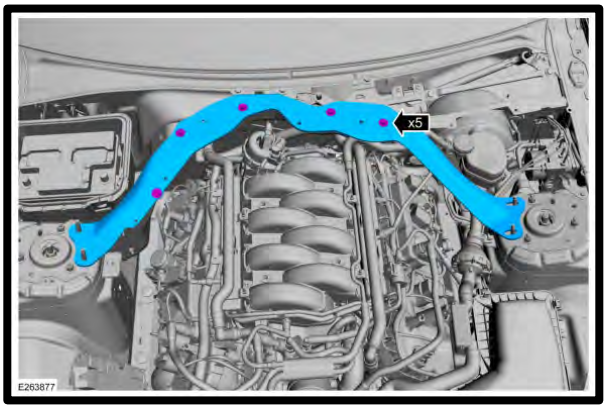

163. Refill the Engine coolant. Verify that your coolant drain is closed, use a filter/strainer to pour the recycled coolant/water mixture that you drained from the radiator. If necessary, top off with a **Ford approved engine coolant**. Whipple also recommends running 2 bottles of Redline Water Wetter which can be found at most automotive parts stores. **⚠ WARNING!! DO NOT USE TAP WATER OR ANY NON-FORD APPROVED ENGINE COOLANT, THIS WILL CAUSE CORRISION IN THE SYSTEM. **(Vehicles that come equipped with Ford Motorcraft Orange should use Motorcraft Specialty Orange.**

164. Attach the negative cable to the battery and tighten using an 8mm wrench.

165. Install the supplied 50-state legal sticker and maintenance decal to the hood next to the factory emissions sticker. Use light amount of acetone to clean surface before installing.

166. Attach the “91 OCTANE OR HIGHER” decal to the gas tank fill cap or door.

The electric water pump used on the Whipple SC system has a built-in micro-processor that will vary pump cycle speed when air bubbles are present in the system. If air is trapped in the system, the pump may cycle at a lower speed while it cavitates, resulting in poor cooling performance, lower power and potentially dangerous conditions.

For the best result, it is highly recommended to use a Radiator Cooling System Vacuum Purge and Refill Kit to properly evacuate the air from the intercooler system before filling the 50/50 mixture of coolant and distilled water. If one is not available, the following procedure will be adequate.

167. Using a Lisle 24680 Spill-Free Funnel, or equivalent, secure the appropriate filler neck adapter to the filler neck.

168. Attach the funnel and fill with a 50/50 mixture of coolant and distilled water until the funnel is half full. Whipple recommends Ford Motorcraft Orange or Zerex G-05 to match the stock color. Whipple also recommends 1 bottle of Red Line Water Wetter or equivalent. Note: The Whipple IC system is compatible with all common types of antifreeze. Never use tap water, this will cause corrosion and destroy the system.

169. Turn the ignition to the **ON** position, after a brief delay, the electric pump motor will cycle. Air bubbles will begin to rise to the filler tee as the coolant level drops, continue to fill while pump is running. Once it’s done filling, turn the ignition key **OFF**, the level will drop, top off with fluid. Reinstall filler cap and turn the ignition **ON** and let run for 15 seconds. Turn key **OFF**, remove cap to release air. Repeat until the filler tee holds at the cold fill level with key **OFF**. To build more pressure in the intercooler system, try squeezing the intercooler hoses while the pump is cycling. Building pressure in the system will help push the trapped air from the intercooler system to the filler tee. It also helps to lift the filler neck 4”-8” higher than its mount to help purge the air. **NOTE:** Do not let the coolant level in the funnel run empty as this may introduce more air into the system.

170. Cycle the ignition to the ON position again and repeat until the sound of the electric pump is continuous without any pulsation and the fluid level is met at the filler cap. ***NOTE: During water pump start-up, it is normal for a slight pulsation to occur. Once the pump has reached its maximum cycle speed, no pulsations should be present. If any pulsations occur, there is air in the system. NEVER GO WOT UNTIL AIR IS BLED OUT!***

171. Several drive cycles may be required to completely purge the air from the intercooler system. During a drive cycle, the intercooler system will build up pressure as the supercharger temperature increases. Any residual air trapped in the system will have to be bled out when the cap is removed. Use a rag when removing in case there is excess pressure. ***TIP: Never go WOT until air has been bleed from IC system, engine failure could occur if not bled properly.***

WARNING: Always avoid removing the filler neck cap when the system is hot. The hot coolant is under pressure and may spray out causing burns.

WARNING: Triple check that the intercooler system is properly bled. Failure to do so can result in engine damage. Turn ignition on, let the pump run for 60 seconds, there should be zero cavitation during this test.

172. Before driving, make sure that you have 91 or higher-octane fuel in the system (RON+MON)/2. Not ½ tank of 87 and ½ tank of 91, all 91 or better fuel in the system. Never, ever mix questionable or low octane fuel with new fuel. The Mustang fuel system is return less, this means the fuel does not return to the tank, even if you put new fuel in tank, the fuel in lines, filter and pump are going to be the other fuel. This can be up to 3 gallons worth of fuel. Running this fuel, even with low load can damage the engine.

173. **NEVER** use aftermarket air filter box or duct with the supplied Whipple calibration. The Whipple calibration is designed to work with the Whipple cold air intake system and nothing else. Changes to the air inlet system will create airflow issues with the MAF system, Whipple does not custom calibrate for changes.

174. Test drive vehicle for the first few miles under normal driving conditions. Listen for any noises, vibrations, engine misfire or anything that does not seem normal. The supercharger does have a slight whining noise under boost conditions, which is normal. If you chose the aftermarket throttle body, idle may take a few minutes to learn.

175. Re-check the radiator and intercooler reservoir coolant level regularly over the first 1,000 miles, top off level as needed.

176. Re-check SC oil level regularly over the first 1,000 miles, level may drop very slightly as it fills the bearings and cavities.

177. Inspect belt system and readjust. It's common for the belt to stretch after first heat cycle.

178. After the initial test drive, go through the belt tensioner process again. On the next test drive, gradually work the vehicle to wide open throttle runs. Listen for any engine detonation (pinging). If engine detonation is present, let up on the throttle immediately. Most detonation causes are low octane gasoline still in the tank.

179. If adding a boost gauge, Whipple has provided an extra 1/8" NPT port at the back of the SC for easy installation. Remove pipe plug using ¼" allen socket, install boost gauge adapter (Whipple not supplied).

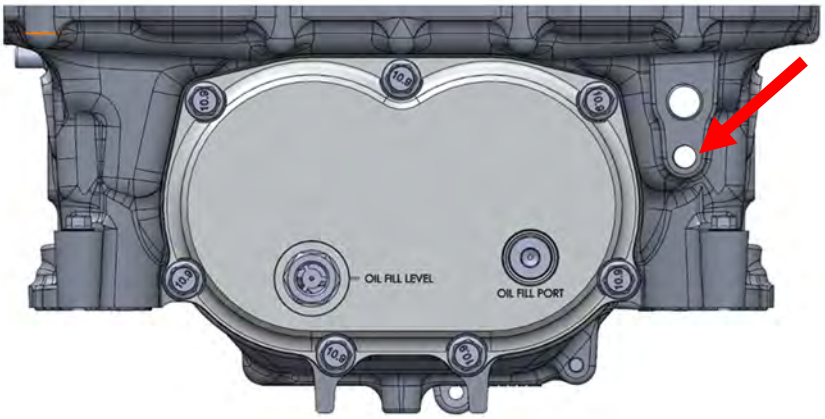

180. If you have questions about your vehicles performance, please check with your installation facility or call Whipple Superchargers at 559.442.1261, Monday through Friday from 8am to 5:00pm, pacific time or email questions to tech@whipplesuperchargers.com.

⚠ WARNING!! Verify the bypass actuator is working properly. To monitor, look at the bypass arm when the motor is not running. Start engine and verify that the actuator arm has opened. This arm will be extended when the engine is above 2" of vacuum (boost) and will be open when there is more than 3" of engine vacuum.

There is a great deal of misinformation about the function of supercharger bypass systems. The supercharger is a positive-displacement pump; that is, so long as it is rotating, it is always pumping air. During low demand or high vacuum operation (i.e. idle, deceleration, and light throttle cruise), the pumping action is undesirable as it creates unwanted heat and noise. The bypass circuit, when open, prevents any pressure buildup across the supercharger and allows air to circulate through the rotors, allowing the supercharger to "idle" freely during these conditions. This results in reduced noise, and by reducing heat buildup in the intake, it significantly improves street and strip performance. As throttle demand increases, the bypass circuit is closed, resulting in full performance and strip performance. As throttle demand increases, the bypass circuit is closed, resulting in full performance from the supercharger. The bypass circuit is never used to limit or control boost during full-throttle operation and defeating or altering the bypass function will not result in improved performance in any condition, and will result in poor drivability and possible supercharger damage.

MAINTENANCE AND SERVICE

Be sure to follow the maintenance and service recommendations below to optimize the life and performance of your Whipple-supercharged vehicle.

For best performance and continued reliability, it is essential to adhere to the following guidelines:

1. Use only premium grade fuel (91-octane or higher). RON+MON/2. The PCM calibration will automatically detect higher octane levels and will increase power accordingly.
2. Always listen for any sign of spark knock or pinging. If present, discontinue use immediately and consult your vehicle owner's manual.
3. Do not operate the vehicle at large throttle opening if the MIL lamp is on steadily. This indicates an electronic engine control malfunction: reduce throttle opening and consult your vehicle dealer.
4. Check the supercharger oil level at every engine oil change. Add Whipple SC oil to the supercharger if required. Do not overfill the supercharger rear gear case.
5. Change the oil in the supercharger every 100,000 miles. Use Whipple SC oil or Ford #XL-4 only. **NOTE: If spinning the SC faster than standard operation, oil should be changed earlier. Severe damage will occur if oil level is over filled.**
6. Check intercooler level at the IC filler reservoir every 7500 miles. Level should be at the middle of the reservoir when coolant is at ambient temp.
7. Change engine oil every 5,000 miles, use 5W-50 Motocraft oil **PN #XL-5W50-QGT.**
8. Service high-flow air filter element every 10,000 miles.
9. Replace spark plugs every 20,000 miles or earlier. Only run Ford Performance M-12405-M50A or SP-581x, .031" gap.
10. Follow your factory service intervals for all maintenance items unless specified.
11. Check the supercharger/accessory drive belt. Adjust or replace as required

CAUTION: Any modification to your vehicle's new computer program may cause serious damage to the engine and/or drive train. The PCM is locked to the VIN, never let anyone, including dealerships install updates to the PCM. Modifications to the PCM will lock power to stock power levels and are not emissions legal.

CONGRATULATIONS

Your new Whipple Supercharger is engineered to significantly increase your engines power across a broad range of RPM's. It is Whipple's goal to improve your driving experience for many miles and years to come.

Whipple Superchargers operate as an air pump and contain internal rotors that are driven by the engine's crankshaft and serpentine belts. The supercharger compresses outside air and channels it into the engine's intake ports. Because of their design, superchargers may generate some additional noise over the standard, normally aspirated induction system.

At idle, you may hear a medium-pitch rattle from the supercharger main housing. This will diminish at about 400-500 rpm above idle.

You may also experience a muffled high-pitched whine during acceleration. This is caused by the pumping action of the supercharger compressing air and only occurs during boost conditions. It is inaudible during part-throttle acceleration.

These are normal noises associated with any supercharger and have no effect on supercharger performance or engine durability.

Your supercharger is warranted by Whipple Superchargers, please see your terms and conditions on the back of your invoice for more information in regards to the limited warranty. NOTE: Whipple Superchargers will not authorize any warranty repair work or supercharger replacement for normal noise.

IMPORTANT INFORMATION

DYNO INSTRUCTIONS

When testing the Mustang on a chassis dyno, it's important to always disconnect the right front wheel speed sensor. This will disengage traction control and ABS. Pulling fuses does not work as the rear brake will still grab, especially on the automatics. 5th gear is closest to 1:1 which will show the highest torque value on inertia based dyno's but will run into the factory speed limiter, therefore 4th gear is ideal for testing.

FUEL OCTANE

There is a large variance in quality of fuels. Top Tier fuel is from large name brands such as Shell, Chevron, Unocal, Sunoco, Texaco, Phillips and others. Secondary fuel is common from grocery chains, liquor stores and small convenient shops. Never run fuels from secondary suppliers. Never run a fuel octane that is below 91octane, (RON+MON)/2 and never run fuel with more volume than 10% Ethanol (E10). It is recommended, when available, to run 92-94 octane. Never mix mid-level (below 91) with 91+, this is very dangerous and can cause severe engine damage. Do not attempt to increase octane ratings with generic octane boosters, these are very hard on spark plugs and many brands do very little to the actual octane rating (1 point is .1 octane). Many brands are hard on spark plugs so constant use will require increased spark plug maintenance. The PCM constantly adapts, if it senses better fuel, it will increase power accordingly.

BOOST LEVELS

All Whipple kits are shipped with boost levels that Whipple feels achieves maximum power while maintaining reliability with stock engines (@ sea level). Additional pulley's are available for lower and higher boost levels, the supplied calibration (complete kits) for the original pulley or larger (lower boost). Higher boost levels must run higher octane levels and is not emissions legal. One can always lower boost with no cal changes required. Increasing boost levels increases risk of engine failure, void warranty and are no longer emissions legal.

EXHAUST

Cat-back exhaust systems help reduce heat and minimize exhaust back pressure. Standard rear exit exhaust won't affect the calibration and are always a good idea for added safety and performance. Long tube headers and/or high flow cats greatly affect emissions and O2 sensor readings, these are not emissions legal and are not supported in anyway. **"Cut out" type exhaust will void any power-train warranty and are not recommended at any time**.

AIR FUEL RATIO

Air fuel ratio is the measurement of the amount of air and fuel being burned during the combustion process. In order for you to monitor the air fuel ratio, you must have a 18mm bung welded into the exhaust or use OBD data logger to monitor the factory wide bands. The ideal placement is pre-catalytic converter as the catalytic converter can give false readings. While in some cases, it may not be possible to measure air fuel pre-cat, one must verify that post-cat that the motor is running at stoich at idle and should technically show .20 to .50 leaner air fuel ratio.

ENGINE COOLANT

Whipple recommends running a 50/50 mix of distilled water and coolant (race applications should run 70/30). The engine coolant temp should run between 200-210deg F under normal driving conditions. We also recommend 1-2 bottles of Red Line Water Wetter coolant additive. This will reduce air bubble insulation, which increases overall engine temp.

FUEL SYSTEM

The Whipple fuel system (FLOW) needs no additional changes for power levels supplied by Whipple. Smaller pulley changes are not supported outside the complete kits supplied. Pulley changes can decrease reliability and lead to engine failure.

BELT LENGTHS

Changing pulley combinations will require belt changes to minimize belt stretch and tensioner travel. See the following charts for a guide. **NOTE:** Boost is a guide and can vary with environment, engines, calibrations, combinations.

PULLEY/BELT LENGTH GUIDE		
SC Pulley	**Stock Balancer**	**20% Balancer**
4.000"	83.2"	87.0"
3.875"	83.2"	87.0"
3.750"	83.2"	86.4"
3.625"	82.5"	86.4"
3.500"	82.5"	86.4"
3.375"	82.2"	85.4"
3.250"	81.5"	85.4"
3.125"	81.5"	85.4"
3.000"	81.0"	85.2"
2.875"	81.0"	85.2"
2.750"	81.0"	85.2"

PULLEY/BOOST/132MM TB		
SC Pulley	**Stock Balancer**	**20% Balancer**
4.000"	10	15
3.875"	11	16
3.750"	12	17
3.625"	13	18
3.500"	14	19
3.375"	15	20
3.250"	16	21
3.125"	17	22
3.000"	18	23
2.875"	19	24
2.750"	20	25

PULLEY/BOOST/STOCK TB		
SC Pulley	**Stock Balancer**	**20% Balancer**
4.000"	9	N/A
3.875"	10	N/A
3.750"	11	N/A
3.625"	12	N/A
3.500"	13	N/A
3.375"	N/A	N/A
3.250"	N/A	N/A
3.125"	N/A	N/A
3.000"	N/A	N/A
2.875"	N/A	N/A
2.750"	N/A	N/A