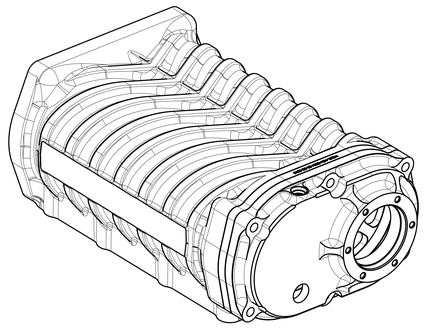

SCALE 0.500

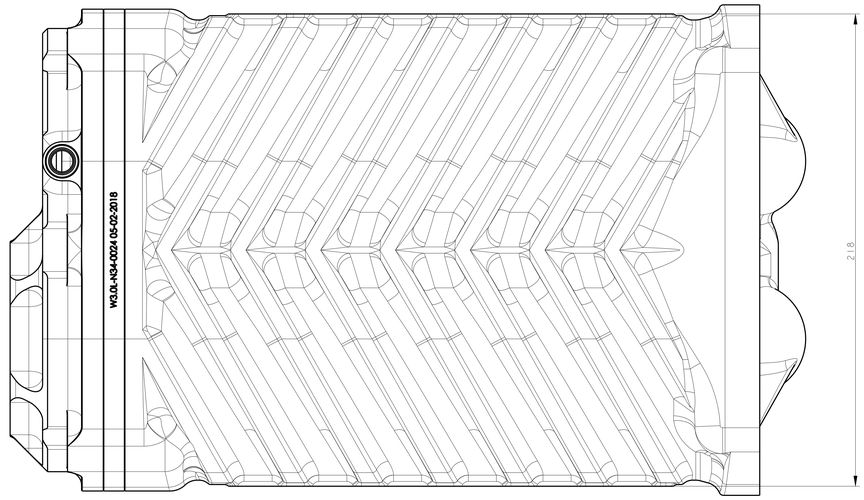

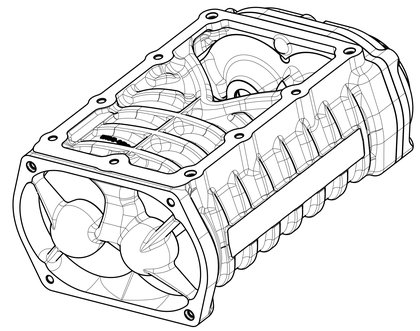

SCALE 0.500

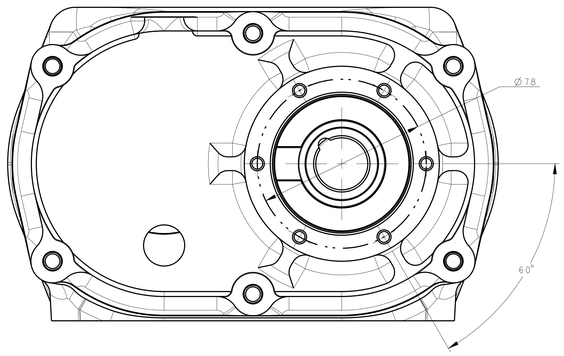

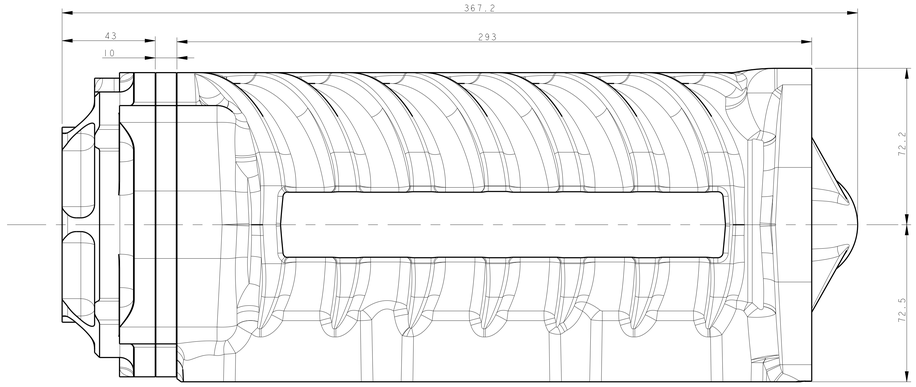

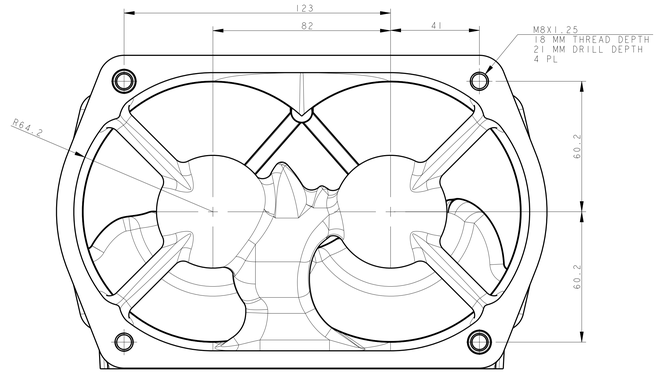

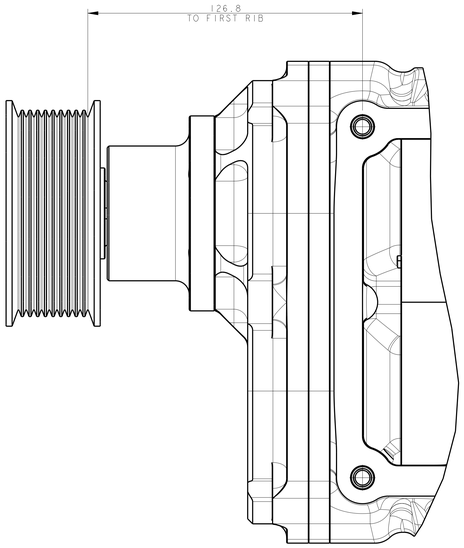

2.46" DRIVE

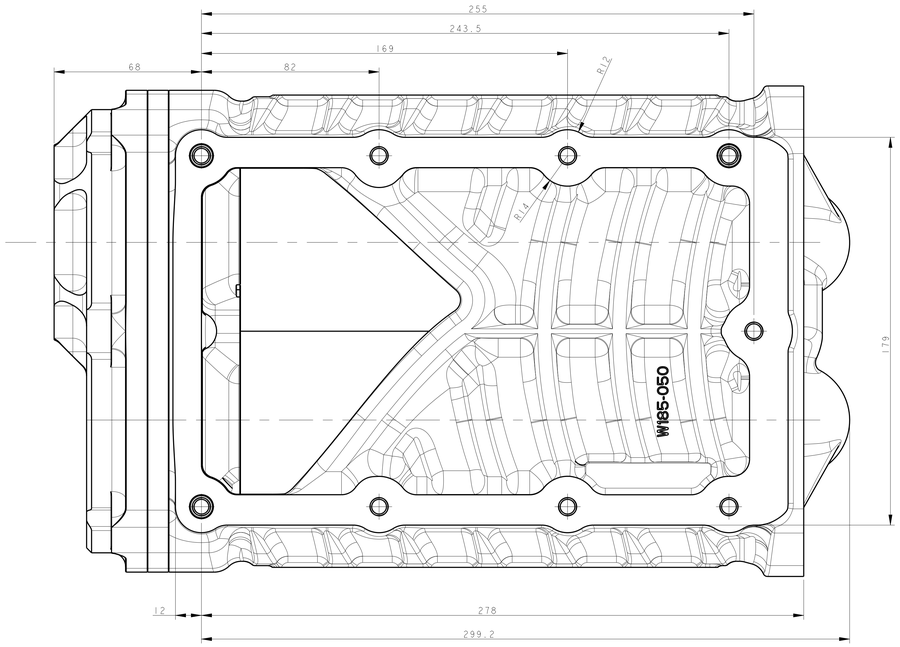

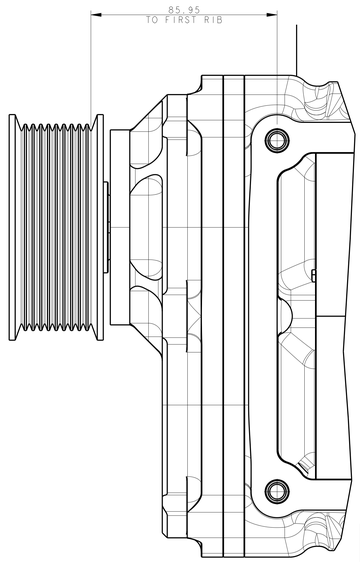

DIRECT DRIVE

REVISIONS							
REV.	UPDATE NO.	CLOCK	DESCRIPTION	DATE	DRAWN	APPROVED
	01					

NO.	QTY.	PART NUMBER	DESCRIPTION
3	1	W3.0L-N34-0024	
2	1	W185-026	
1	1	W185-050	HOUSING, W185

WEIGHT:

THIRD ANGLE PROJECTION

UNLESS OTHERWISE NOTED:
1. ALL DIMENSIONS ARE IN mm
2. DEBURR ALL HOLES AND SHARP EDGES
3. DIMENSIONS APPLY AFTER FINISHING HEAT TREATING AND PLATING

OPEN TOLERANCES:
< 1: 6mm ± 0.05
> 6mm - 30mm ± 0.10
> 30mm - 120mm ± 0.15
> 120mm - 315mm ± 0.2
> 315mm - 1000mm ± 0.3
> 1000mm - 2000mm ± 0.5
ANGLES: ± 0.5 DEG

MATERIAL:

TREATMENT:

SURFACE PREPARATION:

AFTER SURFACE PREPARATION:
◉ MARK:
☐ PART NO., LOT NO.
☐ SERIAL NO.
TEXT HEIGHT:
TEXT DEPTH:
MARKING METHOD:
☐ LASER, MACHINING
☐ STAMP, CASE, MARKER
☐ METAL TAG, STICKER
☐ PLASTIC BAG

WHIPPLE Superchargers

REV. APPVL	REV. APPVL	DRAWN BY:	T. HOFMAN
DATE:	DATE:	DATE:	05/03/19

TITLE:
SUPERCHARGER, W185AX
WHIPPLE SUPERCHARGERS

DRAWING:
WHIPPLE_W185AX_GEN6

REV:

SCALE: 1:0 | SHEET: 1 OF 1

SURFACE FINISH (µm)															
Ra	0.05	0.1	0.2	0.4	0.8	1.6	3.2	6.3	12.5						
Rz	0.25	0.5	1.0	2.0	4.0	8.0	16.0	32.0	63.0	UNLESS OTHERWISE NOTED	TOLERANCE	TOLERANCE	TOLERANCE	TOLERANCE	FOR MODEL FOR DRAWING